PROJECT NUMBER:210216
INSTALLATION OF ELECTRIC VEHICLES CHARGING EQUIPMENT
THE OUTLETS COLLECTION
1101 OUTLET COLLECTION WAY
AUBURN, WA 98001

SITE INFORMATION

EV SITE ADDRESS:
1101 OUTLET COLLECTION WAY
AUBURN, WA 98001

PROPERTY OWNER:
GLIMCHER SUPERMALL VENTURE

EQUIPMENT SUPPLIER:
ELECTRIFY AMERICA, LLC.
2003 EDMUND HALLEY DRIVE SUITE 200
RESTON, VIRGINIA 20191

POWER COMPANY:
PUGET SOUND ENERGY
DAVE.GOODALE@PSE.COM
P: 425-495-7049

COUNTY:
KING COUNTY

LATITUDE (NAD83):
47°17'51.4"N

LONGITUDE (NAD83):
122°14'57.4"W

CONTACT ENGINEER:
KIMLEY-HORN AND ASSOCIATES, INC.
BRYCE.CHRISTENSEN@KIMLEY-HORN.COM
P: 303-228-2339
BRYCE CHRISTENSEN, P.E.

BENCHMARK & BASIS OF BEARING

BENCHMARK: NOT IDENTIFIABLE ON SURVEY

BASIS OF BEARINGS: HELD N 89°05'48" W BETWEEN MONUMENTS FOUND ON THE CENTERLINE OF 15TH ST SW PER GPS OBSERVATIONS. NAD83/2011 WASHINGTON STATE PLANE COORDINATE SYSTEM, NORTH ZONE

APPLICABLE CODES

ALL WORK AND MATERIALS SHALL BE PERFORMED AND INSTALLED IN ACCORDANCE WITH THE CURRENT EDITIONS OF THE BUILDING/DWELLING, STRUCTURAL, PLUMBING, MECHANICAL, ELECTRICAL, AND FIRE/LIFE SAFETY CODES AS ADOPTED BY THE LOCAL GOVERNING AUTHORITIES. NOTHING IN THESE PLANS IS TO BE CONSTRUED TO PERMIT WORK NOT CONFORMING TO THE LOCAL GOVERNING AUTHORITY CODES.

ZONING INFORMATION

PERMITTING JURISDICTION: CITY OF AUBURN
ZONING CLASS: C-3, HEAVY COMMERCIAL DISTRICT

FLOOD HAZARD AREA NOTE

THIS SITE IS LOCATED IN FLOOD ZONE "X" PER FEMA FLOOD MAP FIRM 53033C1261F WITH AN EFFECTIVE DATE OF 5/16/1995.

CONTRACTOR NOTE

CONTRACTOR SHALL COMPLETE INSTALL PER THE SIGNED AND THE SEALED SET OF DRAWINGS. ANY NECESSARY DEVIATIONS FROM THE DRAWINGS MUST BE SUBMITTED THROUGH AN RFI REQUEST PROCESS WITH ENGINEERING FOR AN APPROVAL PRIOR TO CONTRACTOR PROCEEDING WITH A DEVIATION OF THE SIGNED AND SEALED SET OF DRAWINGS.

VICINITY MAP

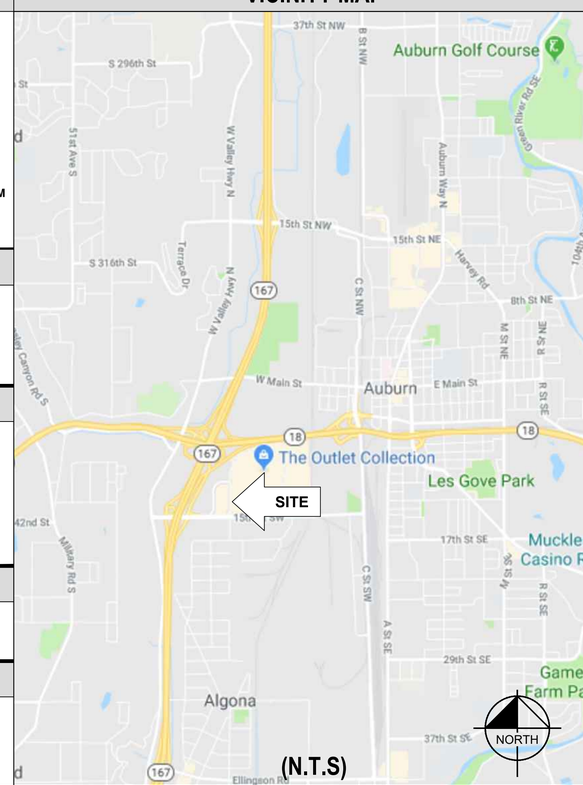

(N.T.S)

AERIAL MAP

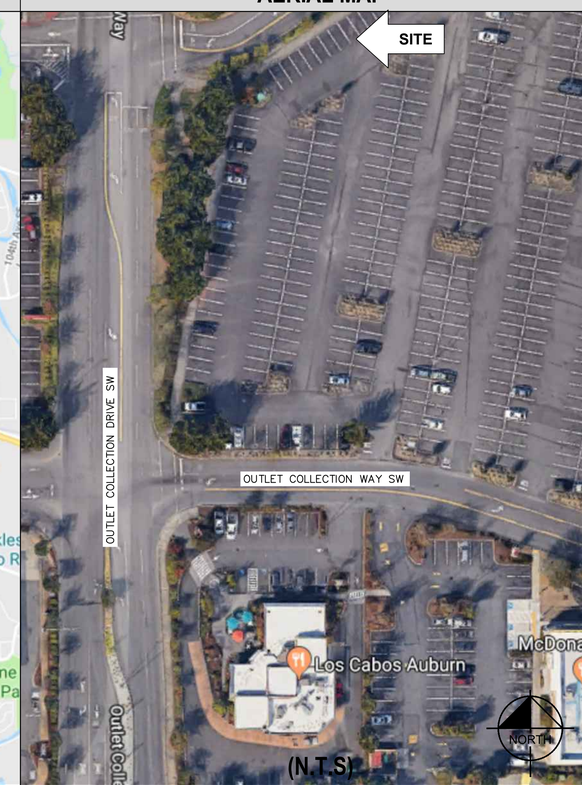

(N.T.S)

PROJECT DESCRIPTION

- INSTALL (1) UTILITY TRANSFORMER
- INSTALL (1) SWITCHBOARD ASSEMBLY
- INSTALL (4) 150 KW BTC DISPENSERS
- INSTALL (4) 150 KW BTC POWER UNITS

DRAWING INDEX

SHEET NO.	SHEET TITLE	REV NO.
CS	COVER SHEET & PROJECT INFORMATION	2
GN-1	GENERAL NOTES	2
GN-2	GENERAL NOTES	2
GN-3	GENERAL NOTES	2
C-1	OVERALL SITE PLAN	2
C-2	DEMOLITION PLAN	2
C-3	ENLARGED SITE PLAN	2
C-4	ENLARGED EQUIPMENT LAYOUT	2
C-5	SITE ELEVATION	2
E-1	UTILITY PLAN	2
E-2	ELECTRICAL PLAN	2
E-3	SINGLE LINE DIAGRAM	2
E-4	ELECTRICAL DETAILS	2
E-5	ELECTRICAL DETAILS	2
D-1	DETAILS	2
D-2	DETAILS	2
D-3	DETAILS	2
D-4	DETAILS	2

FOR REFERENCE ONLY DRAWINGS
PROPERTY SURVEY
STAGING PLAN

CALL BEFORE YOU DIG

811 Know what's below. Call before you dig.

DO NOT SCALE DRAWINGS

CONTRACTOR SHALL VERIFY ALL PLANS, EXISTING DIMENSIONS & CONDITIONS ON THE JOB SITE & SHALL IMMEDIATELY NOTIFY THE ENGINEER IN WRITING OF ANY DISCREPANCIES BEFORE PROCEEDING WITH THE WORK.

ENGINEER OF RECORD

KYLE WATSON
PE NUMBER: 20104525
KIMLEY-HORN AND ASSOCIATES, INC.

electrify america
ELECTRIFY AMERICA, LLC.
2003 EDMUND HALLEY DRIVE
SUITE 200
RESTON, VA 20191

Kimley»Horn
4582 S. ULSTER STREET
SUITE 1500
DENVER, CO 80237
303-288-2300

Job Name:
THE OUTLETS COLLECTION

1101 OUTLET COLLECTION WAY
AUBURN, WA 98001

SHEET DESCRIPTION:
COVER SHEET & PROJECT INFORMATION

KYLE WATSON STATE OF WASHINGTON 20104525 REGISTERED PROFESSIONAL ENGINEER

Project #: 210216
File: CONSTRUCTION DOCUMENTS
Drawn by: JWM
Date(s): 10/05/2019
11/26/2019 REV #1 CD90 PLANS
5/19/2020 REV #2 CD100 PLANS

CS

K:\DEN_CIVIL\096867000_ELECTRIFY AMERICA\WA210216 - OUTLETS COLLECTION (AUBURN, WA)\CADD\PLANSHEETS\COVER SHEET AND GENERAL NOTES.DWG

GENERAL CONSTRUCTION NOTES

FOR THE PURPOSE OF CONSTRUCTION DRAWINGS, THE FOLLOWING DEFINITIONS SHALL APPLY
GENERAL CONTRACTOR: PENDING OWNER SELECTION
OWNER: ELECTRIFY AMERICA

1. ALL SITE WORK SHALL BE COMPLETED AS INDICATED ON THE DRAWINGS.
2. THE GENERAL CONTRACTOR SHALL VISIT THE SITE AND SHALL FAMILIARIZE THEMSELVES WITH ALL CONDITIONS AFFECTING THE PROPOSED WORK AND SHALL MAKE PROVISIONS. GENERAL CONTRACTOR SHALL BE RESPONSIBLE FOR FAMILIARIZING THEMSELVES WITH ALL CONTRACT DOCUMENTS, FIELD CONDITIONS, DIMENSIONS, AND CONFIRMING THAT THE WORK MAY BE ACCOMPLISHED AS SHOWN PRIOR TO PROCEEDING WITH CONSTRUCTION. ANY DISCREPANCIES SHALL BE BROUGHT TO THE ATTENTION OF THE ENGINEER PRIOR TO THE COMMENCEMENT OF WORK.
3. ALL MATERIALS FURNISHED AND INSTALLED SHALL BE IN STRICT ACCORDANCE WITH ALL APPLICABLE CODES, REGULATIONS, AND ORDINANCES. GENERAL CONTRACTOR SHALL ISSUE ALL APPROPRIATE NOTICES AND COMPLY WITH ALL LAWS, ORDINANCES, RULES, REGULATIONS, AND LAWFUL ORDERS OF ANY PUBLIC AUTHORITY REGARDING THE PERFORMANCE OF WORK.
4. ALL WORK CARRIED OUT SHALL COMPLY WITH ALL APPLICABLE MUNICIPAL AND UTILITY COMPANY SPECIFICATIONS AND LOCAL JURISDICTIONAL CODES, ORDINANCES, AND APPLICABLE REGULATIONS.
5. UNLESS NOTED OTHERWISE, THE WORK SHALL INCLUDE FURNISHING MATERIALS, EQUIPMENT, APPURTENANCES, AND LABOR NECESSARY TO COMPLETE ALL INSTALLATIONS AS INDICATED ON THE DRAWINGS.
6. PLANS ARE NOT TO BE SCALED. THESE PLANS ARE INTENDED TO BE A DIAGRAMMATIC OUTLINE ONLY UNLESS OTHERWISE NOTED. DIMENSIONS SHOWN ARE TO FINISH SURFACES UNLESS OTHERWISE NOTED. SPACING BETWEEN EQUIPMENT IS THE MINIMUM REQUIRED CLEARANCE. THEREFORE, IT IS CRITICAL TO FIELD VERIFY DIMENSIONS, SHOULD THERE BE ANY QUESTIONS REGARDING THE CONTRACT DOCUMENTS, THE CONTRACTOR SHALL BE RESPONSIBLE FOR OBTAINING A CLARIFICATION FROM THE ENGINEER PRIOR TO PROCEEDING WITH THE WORK. DETAILS ARE INTENDED TO SHOW DESIGN INTENT. MODIFICATIONS MAY BE REQUIRED TO SUIT JOB DIMENSIONS OR CONDITIONS AND SUCH MODIFICATIONS SHALL BE INCLUDED AS PART OF WORK AND PREPARED BY THE ENGINEER PRIOR TO PROCEEDING WITH WORK.
7. THE CONTRACTOR SHALL INSTALL ALL EQUIPMENT AND MATERIALS IN ACCORDANCE WITH MANUFACTURER'S RECOMMENDATIONS UNLESS SPECIFICALLY STATED OTHERWISE.
8. IF THE SPECIFIED EQUIPMENT CANNOT BE INSTALLED AS SHOWN ON THESE DRAWINGS, THE CONTRACTOR SHALL PROPOSE AN ALTERNATIVE INSTALLATION SPACE FOR APPROVAL BY THE ENGINEER PRIOR TO PROCEEDING.
9. THE GENERAL CONTRACTOR SHALL BE RESPONSIBLE FOR THE SAFETY OF WORK AREA, ADJACENT AREAS AND BUILDING OCCUPANTS THAT ARE LIKELY TO BE AFFECTED BY THE WORK UNDER THIS CONTRACT. WORK SHALL CONFORM TO ALL OSHA REQUIREMENTS AND THE LOCAL JURISDICTION.
10. THE GENERAL CONTRACTOR SHALL COORDINATE WORK AND SCHEDULE WORK ACTIVITIES WITH OTHER DISCIPLINES.
11. CONSTRUCTION SHALL BE DONE IN A WORKMANLIKE MANNER BY COMPETENT EXPERIENCED WORKMAN IN ACCORDANCE WITH APPLICABLE CODES AND THE BEST ACCEPTED PRACTICE.
12. WORK PREVIOUSLY COMPLETED IS REPRESENTED BY LIGHT SHADED LINES AND NOTES. THE SCOPE OF WORK FOR THIS PROJECT IS REPRESENTED BY DARK SHADED LINES AND NOTES. CONTRACTOR SHALL NOTIFY THE GENERAL CONTRACTOR OF ANY EXISTING CONDITIONS THAT DEVIATE FROM THE DRAWINGS PRIOR TO BEGINNING CONSTRUCTION.
13. THE CONTRACTOR SHALL PROVIDE WRITTEN NOTICE TO THE CONSTRUCTION MANAGER 48 HOURS PRIOR TO COMMENCEMENT OF WORK.
14. THE CONTRACTOR SHALL PROTECT EXISTING IMPROVEMENTS, PAVEMENTS, CURBS, LANDSCAPING AND STRUCTURES. ANY DAMAGED PART SHALL BE REPAIRED AT CONTRACTOR'S EXPENSE TO THE SATISFACTION OF THE OWNER.
15. THE CONTRACTOR SHALL CONTACT UTILITY LOCATING SERVICES PRIOR TO THE START OF CONSTRUCTION.
16. THE GENERAL CONTRACTOR SHALL COORDINATE AND MAINTAIN ACCESS FOR ALL TRADES AND CONTRACTORS TO THE SITE AND/OR BUILDING.
17. THE GENERAL CONTRACTOR SHALL BE RESPONSIBLE FOR SECURITY OF THE SITE FOR THE DURATION OF CONSTRUCTION UNTIL JOB COMPLETION.
18. THE GENERAL CONTRACTOR SHALL MAINTAIN IN GOOD CONDITION ONE COMPLETE SET OF PLANS WITH ALL REVISIONS, ADDENDA, AND CHANGE ORDERS ON THE PREMISES AT ALL TIMES.
19. THE CONTRACTOR SHALL PROVIDE PORTABLE FIRE EXTINGUISHERS WITH A RATING OF NOT LESS THAN 2-A:10-B:C AND SHALL BE WITHIN 25 FEET OF TRAVEL DISTANCE TO ALL PORTIONS OF WHERE THE WORK IS BEING COMPLETED DURING CONSTRUCTION.
20. ALL EXISTING ACTIVE SEWER, WATER, GAS, ELECTRIC, AND OTHER UTILITIES SHALL BE PROTECTED AT ALL TIMES, AND WHERE REQUIRED FOR THE PROPER EXECUTION OF THE WORK, SHALL BE RELOCATED AS DIRECTED BY THE ENGINEER. EXTREME CAUTION SHOULD BE USED BY THE CONTRACTOR WHEN EXCAVATING OR DRILLING PIERS AROUND OR NEAR UTILITIES. THE CONTRACTOR SHALL PROVIDE SAFETY TRAINING FOR THE WORKING CREW. THIS SHALL INCLUDE BUT NOT BE LIMITED TO A) FALL PROTECTION, B) CONFINED SPACE, C) ELECTRICAL SAFETY, AND D) TRENCHING & EXCAVATION.

GENERAL CONSTRUCTION NOTES CONT.

22. ALL EXISTING INACTIVE SEWER, WATER, GAS, ELECTRIC, AND OTHER UTILITIES, WHICH INTERFERE WITH THE EXECUTION OF THE WORK, SHALL BE REMOVED, CAPPED, PLUGGED OR OTHERWISE DISCONNECTED AT POINTS WHICH WILL NOT INTERFERE WITH THE EXECUTION OF THE WORK, AS DIRECTED BY THE ENGINEER, AND SUBJECT TO THE APPROVAL OF THE OWNER AND/OR LOCAL UTILITIES.
23. THE AREAS OF THE OWNER'S PROPERTY DISTURBED BY THE WORK AND NOT COVERED BY THE EQUIPMENT OR DRIVEWAY, SHALL BE GRADED TO A UNIFORM SLOPE, AND STABILIZED TO PREVENT EROSION.
24. CONTRACTOR SHALL MINIMIZE DISTURBANCE TO THE EXISTING SITE DURING CONSTRUCTION. EROSION CONTROL MEASURES, IF REQUIRED DURING CONSTRUCTION, SHALL BE IN CONFORMANCE WITH THE FEDERAL AND LOCAL JURISDICTION FOR EROSION AND SEDIMENT CONTROL.
25. NO FILL OR EMBANKMENT MATERIAL SHALL BE PLACED ON FROZEN GROUND. FROZEN MATERIALS, SNOW OR ICE SHALL NOT BE PLACED IN ANY FILL OR EMBANKMENT.
26. THE SUBGRADE SHALL BE BROUGHT TO A SMOOTH UNIFORM GRADE AND COMPACTED TO 95 PERCENT STANDARD PROCTOR DENSITY UNDER PAVEMENT AND STRUCTURES AND 80 PERCENT STANDARD PROCTOR DENSITY IN OPEN SPACE. ALL TRENCHES IN PUBLIC RIGHT OF WAY SHALL BE BACKFILLED WITH FLOWABLE FILL OR OTHER MATERIAL PRE-APPROVED BY THE LOCAL JURISDICTION.
27. ALL NECESSARY RUBBISH, STUMPS, DEBRIS, STICKS, STONES, AND OTHER REFUSE SHALL BE REMOVED FROM THE SITE AND DISPOSED OF IN A LAWFUL MANNER.
28. ALL BROCHURES, OPERATING AND MAINTENANCE MANUALS, CATALOGS, SHOP DRAWINGS, AND OTHER DOCUMENTS SHALL BE TURNED OVER TO THE GENERAL CONTRACTOR AT COMPLETION OF CONSTRUCTION AND PRIOR TO PAYMENT.
29. THE CONTRACTOR SHALL SUBMIT A COMPLETE SET OF AS-BUILT REDLINES TO THE GENERAL CONTRACTOR UPON COMPLETION OF PROJECT AND PRIOR TO FINAL PAYMENT.
30. THE CONTRACTOR SHALL LEAVE PREMISES IN A CLEAN CONDITION.
31. THE PROPOSED FACILITY WILL BE UNMANNED AND DOES NOT REQUIRE POTABLE WATER OR SEWER SERVICE, AND IS NOT FOR HUMAN HABITATION (NO HANDICAP ACCESS REQUIRED).
32. NO OUTDOOR STORAGE OR SOLID WASTE CONTAINERS ARE PROPOSED.
33. CONTRACTORS SHALL BE RESPONSIBLE FOR OBTAINING ALL PERMITS AND INSPECTIONS REQUIRED FOR CONSTRUCTION. IF CONTRACTOR CANNOT OBTAIN A PERMIT, THEY MUST NOTIFY THE GENERAL CONTRACTOR IMMEDIATELY.
34. THE CONTRACTOR SHALL REMOVE ALL TRASH AND DEBRIS FROM THE SITE ON A DAILY BASIS.
35. INFORMATION SHOWN ON THESE DRAWINGS WAS OBTAINED FROM SITE VISITS AND/OR DRAWINGS PROVIDED BY THE SITE OWNER. CONTRACTORS SHALL NOTIFY THE ENGINEER OF ANY DISCREPANCIES PRIOR TO ORDERING MATERIAL OR PROCEEDING WITH CONSTRUCTION.

ELECTRICAL NOTES

1. THE ELECTRICAL CONTRACTOR SHALL SUPPLY AND INSTALL ANY/ALL ELECTRICAL WORK INDICATED. ANY/ALL CONSTRUCTION SHALL BE IN ACCORDANCE WITH DRAWINGS AND ANY/ALL APPLICABLE SPECIFICATIONS. IF ANY PROBLEMS ARE ENCOUNTERED BY COMPLYING WITH THESE REQUIREMENTS, CONTRACTOR SHALL NOTIFY 'CONSTRUCTION MANAGER' AS SOON AS POSSIBLE, AFTER THE DISCOVERY OF THE PROBLEMS, AND SHALL NOT PROCEED WITH THAT PORTION OF WORK, UNTIL THE 'CONSTRUCTION MANAGER' HAS DIRECTED THE CORRECTIVE ACTIONS TO BE TAKEN.
2. THE ELECTRICAL CONTRACTOR SHALL VISIT THE JOB SITE AND FAMILIARIZE THEMSELVES WITH ANY/ALL CONDITIONS AFFECTING ELECTRICAL AND COMMUNICATION INSTALLATION AND MAKE PROVISIONS AS TO THE COST THEREOF. THE CONDITION OF EXISTING ELECTRICAL EQUIP., LIGHT FIXTURES, ETC., THAT ARE PART OF THE FINAL SYSTEM, SHALL BE VERIFIED BY THE CONTRACTOR, PRIOR TO THE SUBMITTAL OF HIS BID. FAILURE TO COMPLY WITH THIS PARAGRAPH WILL IN NO WAY RELIEVE CONTRACTOR OF PERFORMING ALL WORK NECESSARY FOR A COMPLETE AND WORKING SYSTEM.
3. ALL WORK SHALL BE PERFORMED IN ACCORDANCE WITH THE LATEST EDITION OF THE NEC AND ALL CODES AND LOCAL ORDINANCES OF THE LOCAL POWER COMPANIES HAVING JURISDICTION AND SHALL INCLUDE BUT NOT BE LIMITED TO:
   A. UL - UNDERWRITERS LABORATORIES
   B. NEC - NATIONAL ELECTRICAL CODE
   C. NEMA - NATIONAL ELECTRICAL MANUFACTURERS ASSOC.
   D. OSHA - OCCUPATIONAL SAFETY AND HEALTH ACT
   E. SBC - STANDARD BUILDING CODE

F. NFPA - NATIONAL FIRE PROTECTION ASSOCIATION

4. DO NOT SCALE ELECTRICAL DRAWINGS, REFER TO SITE PLANS AND ELEVATIONS FOR EXACT LOCATIONS OF ALL EQUIPMENT, BUT CONFIRM WITH 'CONSTRUCTION MANAGER' ANY SIZES AND LOCATIONS WHEN NEEDED.
5. EXISTING SERVICES: THE CONTRACTOR SHALL NOT INTERRUPT EXISTING SERVICES WITHOUT WRITTEN PERMISSION OF THE OWNER.
6. THE CONTRACTOR SHALL PAY FOR ANY/ALL PERMITS, FEES, INSPECTIONS AND TESTING. THE CONTRACTOR IS TO OBTAIN PERMITS AND APPROVED SUBMITTALS PRIOR TO THE WORK BEGINNING OR ORDERING THE EQUIPMENT.
7. THE TERM "PROVIDE" USED IN CONSTRUCTION DOCUMENTS AND SPECIFICATIONS, INDICATES THAT THE CONTRACTOR SHALL FURNISH AND INSTALL.

ELECTRICAL NOTES CONT.

8. THE CONTRACTOR SHALL CONFIRM WITH LOCAL UTILITY COMPANY ANY/ALL REQUIREMENTS SUCH AS THE: LUG SIZE RESTRICTIONS, CONDUIT ENTRY, SIZE OF TRANSFORMERS, SCHEDULED DOWNTIME FOR THE OWNERS' CONFIRMATION, ETC. ANY/ALL CONFLICTS SHALL BE BROUGHT TO THE ATTENTION OF THE CONSTRUCTION MANAGER, PRIOR TO BEGINNING ANY WORK.
9. CONDUCTORS: CONTRACTOR SHALL USE 98% CONDUCTIVITY COPPER OR ALUMINUM WITH TYPE (THWN-2) INSULATION, 600 VOLT, COLOR CODED UNLESS SPECIFIED DIFFERENTLY ON DRAWINGS.
10. ALL (THWN-2) WIRING INSTALLATIONS TO FOLLOW MANUFACTURER'S INSTRUCTIONS AND RECOMMENDATIONS.
11. OUTLET BOXES SHALL BE PRESSED STEEL IN DRY LOCATIONS, CAST ALLOY WITH THREADED HUBS IN WET/DAMP LOCATIONS AND SPECIAL ENCLOSURES FOR OTHER CLASSIFIED AREAS.
12. IT IS NOT THE INTENT OF THESE PLANS TO SHOW EVERY MINOR DETAIL OF THE CONSTRUCTION. CONTRACTOR IS EXPECTED TO FURNISH AND INSTALL ALL ITEMS FOR A COMPLETE ELECTRICAL SYSTEM AND PROVIDE ALL REQUIREMENTS FOR THE EQUIPMENT TO BE PLACED IN PROPER WORKING ORDER. CONTRACTOR IS TO PROVIDE ALL ELECTRICAL EQUIPMENT UNLESS OTHERWISE DIRECTED.
13. ALL WORK SHALL BE PERFORMED BY A LICENSED ELECTRICAL CONTRACTOR IN A FIRST CLASS, WORKMANLIKE MANNER. THE COMPLETED SYSTEM SHALL BE FULLY OPERATIONAL AND SUBJECT TO REGULATORY INSPECTION AND APPROVAL BY CONSTRUCTION MANAGER.
14. ALL WORK SHALL BE COORDINATED WITH OTHER TRADES TO AVOID INTERFERENCE WITH THE PROGRESS OF CONSTRUCTION.
15. CONTRACTOR SHALL GUARANTEE ANY/ALL MATERIALS AND WORK FREE FROM DEFECTS FOR A PERIOD OF NOT LESS THAN ONE YEAR FROM DATE OF ACCEPTANCE.
16. THE CORRECTION OF ANY DEFECTS SHALL BE COMPLETED WITHOUT ANY ADDITIONAL CHARGE AND SHALL INCLUDE THE REPLACEMENT OR THE REPAIR OF ANY OTHER PHASE OF THE INSTALLATION, WHICH MAY HAVE BEEN DAMAGED THEREIN.
17. ADEQUATE AND REQUIRED LIABILITY INSURANCE SHALL BE PROVIDED FOR PROTECTION AGAINST PUBLIC LOSS AND ANY/ALL PROPERTY DAMAGE FOR THE DURATION OF WORK.
18. PROVIDE AND INSTALL CONDUIT, CONDUCTORS, PULL WIRES, BOXES, COVER PLATES AND DEVICES FOR ALL OUTLETS AS INDICATED.
19. TRENCHING AND BACKFILL: THE CONTRACTOR SHALL PROVIDE FOR ALL UNDERGROUND INSTALLED CONDUIT AND/OR CABLES INCLUDING EXCAVATION AND BACKFILLING AND COMPACTION. REFER TO GENERAL SITE WORK NOTES.
20. MATERIALS, PRODUCTS AND EQUIPMENT, INCLUDING ALL COMPONENTS THEREOF, SHALL BE NEW AND SHALL APPEAR ON THE LIST OF U.L. APPROVED ITEMS AND SHALL MEET OR EXCEED THE REQUIREMENTS OF THE NEC, NEMA AND IEEE.
21. CONTRACTOR SHALL SUBMIT SHOP DRAWINGS OR MANUFACTURES CATALOG INFORMATION OF ANY/ALL LIGHTING FIXTURES, SWITCHES AND ALL OTHER ELECTRICAL ITEMS FOR APPROVAL BY THE CONSTRUCTION MANAGER PRIOR TO INSTALLATION.
22. ANY CUTTING OR PATCHING DEEMED NECESSARY FOR ELECTRICAL WORK IS THE ELECTRICAL CONTRACTORS RESPONSIBILITY AND SHALL BE INCLUDED IN THE COST FOR WORK AND PERFORMED TO THE SATISFACTION OF THE 'CONSTRUCTION MANAGER' UPON FINAL ACCEPTANCE.
23. THE ELECTRICAL CONTRACTOR SHALL LABEL ALL PANELS WITH ONLY TYPEWRITTEN DIRECTORIES.
24. DISCONNECT SWITCHES SHALL BE H.P. RATED HEAVY-DUTY, QUICK-MAKE AND QUICK-BREAK ENCLOSURES, AS REQUIRED BY EXPOSURE TYPE.
25. ALL CONNECTIONS EXCEPT THE EV CHARGE CABLE TERMINATION IN THE CHARGE POST SHALL BE MADE WITH A PROTECTIVE COATING OF AN ANTI-OXIDE COMPOUND SUCH AS "NOALOX" BY IDEAL INDUSTRIAL INC., COAT ALL WIRE SURFACES BEFORE CONNECTING. EXPOSED ALUMINUM & COPPER SURFACES, INCLUDING GROUND BARS, SHALL BE TREATED - NO SUBSTITUTIONS.
26. ALL EXTERIOR AND INTERIOR ABOVE GROUND CONDUIT SHALL BE RIGID UNLESS SPECIFIED OTHERWISE. ALL BURIED CONDUITS SHALL BE SCH 40 PVC UNLESS SPECIFIED OTHERWISE.
27. RACEWAYS: CONDUIT SHALL BE SCHEDULE 40 PVC, MEETING OR EXCEEDING NEMA TC2 - 1990. THE CONTRACTOR SHALL PLUG AND CAP EACH END OF SPARE AND EMPTY CONDUITS AND PROVIDE TWO SEPARATE PULL STRINGS - 200 LBS TEST POLYETHYLENE CORD. ALL CONDUIT BENDS SHALL BE A MINIMUM OF 3 FT. RADIUS. RGS CONDUITS WHEN SPECIFIED, SHALL MEET UL-6 FOR GALVANIZED STEEL. ALL FITTINGS SHALL BE SUITABLE FOR USE WITH THREADED RIGID CONDUIT. COAT ALL THREADS WITH 'BRITE ZINC' OR 'GOLD GALV'.
28. SUPPORT OF ALL ELECTRICAL WORK SHALL BE AS REQUIRED BY NEC.
29. CONNECTORS FOR POWER CONDUCTORS: CONTRACTOR SHALL USE PRESSURE TYPE INSULATED TWIST-ON CONNECTORS FOR NO. 10 AWG AND SMALLER. USE SOLDERLESS MECHANICAL TERMINAL LUGS FOR NO. 8 AWG AND LARGER.
30. THE CONTRACTOR SHALL PLACE TWO LENGTHS OF WARNING TAPE AT A DEPTH OF 12" BELOW GROUND AND DIRECTLY ABOVE ELECTRICAL SERVICE CONDUITS. CAUTION TAPE TO READ "CAUTION BURIED ELECTRIC".
31. WHEN DIRECTIONAL BORING IS REQUIRED, CONTRACTOR SHALL INSTALL A LOOSE TONING WIRE WITHIN INSTALLED CONDUIT TO ALLOW FOR IDENTIFICATION OF UNDERGROUND CONDUITS.
32. ALL BOLTS SHALL BE STAINLESS STEEL.
33. ALL MATERIALS AND EQUIPMENT SUPPLIED AND INSTALLED BY THE CONTRACTOR SHOULD BE NEW AND UNUSED.

electrify america

ELECTRIFY AMERICA, LLC.
2003 EDMUND HALLEY DRIVE
SUITE 200
RESTON, VA 20191

Kimley»Horn

4582 S. ULSTER STREET
SUITE 1500
DENVER, CO 80237
303-288-2300

Job Name:
THE OUTLETS COLLECTION

1101 OUTLET COLLECTION WAY
AUBURN, WA 98001

SHEET DESCRIPTION:
GENERAL NOTES

KYLE WATSON
STATE OF WASHINGTON
20104525
REGISTERED PROFESSIONAL ENGINEER

Project #: 210216
File: CONSTRUCTION DOCUMENTS
Drawn by: JWM
Date(s): 10/05/2019
11/26/2019 REV #1 CD90 PLANS
5/19/2020 REV #2 CD100 PLANS

GN-1

K:\DEN_CIVIL\096867000_ELECTRIFY AMERICA\WA210216 – OUTLETS COLLECTION (AUBURN, WA)\CADD\PLANSHEETS\COVER SHEET AND GENERAL NOTES.DWG

GENERAL SITE WORK NOTES

PART 1 - GENERAL

CLEARING, GRUBBING, STRIPPING, EROSION CONTROL, SURVEY, LAYOUT, SUBGRADE PREPARATION AND FINISH GRADING AS REQUIRED TO COMPLETE THE PROPOSED WORK SHOWN IN THESE PLANS.

1. REFERENCES:
   - A. WDOT (WASHINGTON STATE DEPARTMENT OF TRANSPORTATION STANDARD SPECIFICATIONS FOR HIGHWAY CONSTRUCTION-CURRENT EDITION).
   - B. ASTM (AMERICAN SOCIETY FOR TESTING AND MATERIALS).
   - C. OSHA (OCCUPATION SAFETY AND HEALTH ADMINISTRATION).

2. INSPECTION AND TESTING:
   - A. GENERAL CONTRACTOR SHALL PERFORM ALL WORK IN CONFORMANCE WITH THE PLANS AND SPECIFICATIONS. PERFORM INSPECTIONS BEFORE CONCEALING WORK WITH FOLLOW-ON ACTIVITIES (BACKFILL, CONCRETE POUR, ETC).

3. SITE MAINTENANCE AND PROTECTION:
   - A. PROVIDE ALL NECESSARY JOB SITE MAINTENANCE FROM COMMENCEMENT OF WORK UNTIL COMPLETION OF THE CONTRACT.
   - B. AVOID DAMAGE TO THE SITE AND TO EXISTING FACILITIES, STRUCTURES, TREES, AND SHRUBS DESIGNATED TO REMAIN. TAKE PROTECTIVE MEASURES TO PREVENT EXISTING FACILITIES THAT ARE NOT DESIGNATED FOR REMOVAL FROM BEING DAMAGED BY THE WORK.
   - C. KEEP SITE FREE OF ALL PONDING WATER.
   - D. PROVIDE EROSION CONTROL MEASURES IN ACCORDANCE WITH STATE DOT, LOCAL PERMITTING AGENCY AND EPA REQUIREMENTS.
   - E. PROVIDE AND MAINTAIN ALL TEMPORARY FENCING, BARRICADES, WARNING SIGNALS AND SIMILAR DEVICES NECESSARY TO PROTECT AGAINST THEFT FROM PROPERTY DURING THE ENTIRE PERIOD OF CONSTRUCTION. REMOVE ALL SUCH DEVICES UPON COMPLETION OF THE WORK.
   - F. EXISTING UTILITIES: DO NOT INTERRUPT EXISTING UTILITIES SERVING FACILITIES OCCUPIED BY THE OWNER OR OTHERS, EXCEPT WHEN PERMITTED IN WRITING BY THE CONSTRUCTION MANAGER AND THEN ONLY AFTER ACCEPTABLE TEMPORARY UTILITY SERVICES HAVE BEEN PROVIDED.
   - G. PROVIDE A MINIMUM 48-HOUR NOTICE TO THE CONSTRUCTION MANAGER AND RECEIVE WRITTEN NOTICE TO PROCEED BEFORE INTERRUPTING ANY UTILITY SERVICE.
   - H. SOD PLANTED IN THE FALL MUST ESTABLISH ITS ROOTS BEFORE THE FIRST WINTER FROST. DETERMINE WHEN THE FIRST FROST USUALLY OCCURS, AND PLANT THE SOD NO LATER THAN ONE MONTH BEFORE THE FIRST FROST. IF THE CONSTRUCTION IS FINISHED LATER THAN ONE MONTH BEFORE THE FIRST FROST, USE STRAW UNTIL SOD CAN BE INSTALLED.

PART 2 - PRODUCTS

1. SUITABLE MATERIAL – SUITABLE MATERIAL ARE USED FOR GRADING AND BACKFILL. SUITABLE MATERIALS ARE ON SITE SOILS REMOVED FROM EXCAVATIONS THAT EXCLUDE FROZEN SOIL, ROOTS OR ORGANIC MATERIAL, DEBRIS, TRASH, REFUSE, OR PARTICLES SIZE GREATER THAN 3-INCH. SUITABLE SOILS HAVE MOISTURE CONTENTS THAT ALLOW THEM TO BE COMPACTED TO THE SAME DENSITY AS THE NATIVE SOILS.
2. UNSUITABLE MATERIAL – SOILS THAT ARE FROZEN, CONTAIN ROOTS OR ORGANIC MATERIAL, DEBRIS, TRASH, REFUSE, OR PARTICLES SIZES GREATER THAN 3-INCH. SOILS THAT ARE TOO WET OR TOO DRY TO BE COMPACTED TO THE SAME DENSITY AS THE NATIVE SOILS ARE UNSUITABLE.
3. GRANULAR BACKFILL – SHALL MEET THE FOLLOWING GRADATION

SIEVE SIZE	TOTAL PERCENT PASSING
1 1/2 INCH (37.5 MM)	100
NO. 4 (4.75 MM)	30 TO 60
NO 200 (0.075 MM)	3 TO 15

4. GRANULAR BEDDING – WELL-GRADED SAND MEETING THE GRADATION REQUIREMENT OF ASTM C 33 FINE AGGREGATE.
5. CONTROLLED LOW STRENGTH MATERIAL (CLSM)– A SELF LEVELING AND SELF COMPACTING CEMENTITIOUS MATERIAL COMPOSED OF SAND, COARSE AGGREGATE, CEMENT, FLY ASH, WATER AND ADMIXTURES. CLSM SHALL BE EXCAVATABLE AND SHALL HAVE A DESIGNED UNCONFINED COMPRESSIVE STRENGTH OF BETWEEN 50 TO 100 PSI.
6. BACKFILL – PRODUCTS MEETING THE REQUIREMENTS OF SUITABLE MATERIAL, GRANULAR BEDDING, GRANULAR BACKFILL OR CLSM.
7. TOPSOIL – SOIL WITH AN ORGANIC CONTENT SUFFICIENT TO ALLOW VEGETATIVE GROWTH.

GENERAL SITE WORK NOTES CONT.

PART 3 - EXECUTION

1. GENERAL:
   - A. BEFORE STARTING GENERAL SITE PREPARATION ACTIVITIES, INSTALL EROSION AND SEDIMENT CONTROL MEASURES. THE WORK AREA SHALL BE CONSTRUCTED AND MAINTAINED IN SUCH CONDITION THAT IN THE EVENT OF RAIN THE SITE WILL BE DRAINED AT ALL TIMES.
   - B. BEFORE ALL SURVEY, LAYOUT, STAKING, AND MARKING, ESTABLISH AND MAINTAIN ALL LINES, GRADES, ELEVATIONS AND BENCHMARKS NEEDED FOR EXECUTION OF THE WORK. CONDUCT UTILITY LOCATE IN ACCORDANCE WITH THE ONE-CALL NOTIFICATION
   - C. CLEAR AND GRUB THE AREA WITHIN THE LIMITS OF THE SITE. REMOVE TREES, BRUSH, STUMPS, RUBBISH AND OTHER DEBRIS AND VEGETATION RESTING ON OR PROTRUDING THROUGH THE SURFACE OF THE SITE AREA TO BE CLEARED.
   - D. REMOVE THE FOLLOWING MATERIALS TO A DEPTH OF NO LESS THAN 12 INCHES BELOW THE ORIGINAL GROUND SURFACE: ROOTS, STUMPS, AND OTHER DEBRIS, BRUSH, AND REFUSE EMBEDDED IN OR PROTRUDING THROUGH THE GROUND SURFACE, RAKE, DISK OR PLOW THE AREA TO A DEPTH OF NO LESS THAN 6 INCHES, AND REMOVE TO A DEPTH OF 12 INCHES ALL ROOTS AND OTHER DEBRIS THEREBY EXPOSED.
   - E. REMOVE TOPSOIL MATERIAL COMPLETELY FROM THE SURFACE UNTIL THE SOIL NO LONGER MEETS THE DEFINITION OF TOPSOIL. AVOID MIXING TOPSOIL WITH SUBSOIL OR OTHER UNDESIRABLE MATERIALS. SUFFICIENT TOPSOIL MAY BE STOCKPILED ON SITE FOR USE DURING FINAL SITE GRADING.
   - F. EXCEPT WHERE EXCAVATION TO GREATER DEPTH IS INDICATED, FILL DEPRESSIONS RESULTING FROM CLEARING, GRUBBING AND DEMOLITION WORK COMPLETELY WITH SUITABLE MATERIAL.
   - G. REMOVE FROM THE SITE AND DISPOSE IN AN AUTHORIZED LANDFILL ALL DEBRIS RESULTING FROM CLEARING AND GRUBBING OPERATIONS. BURNING WILL NOT BE PERMITTED.
   - H. PRIOR TO EXCAVATING, THOROUGHLY EXAMINE THE AREA TO BE EXCAVATED AND/OR TRENCHED TO VERIFY THE LOCATIONS OF FEATURES INDICATED ON THE DRAWINGS AND TO ASCERTAIN THE EXISTENCE AND LOCATION OF ANY STRUCTURE, UNDERGROUND STRUCTURE, OR OTHER ITEM NOT SHOWN THAT MIGHT INTERFERE WITH THE PROPOSED CONSTRUCTION. NOTIFY THE CONSTRUCTION MANAGER OF ANY OBSTRUCTIONS THAT WILL PREVENT ACCOMPLISHMENT OF THE WORK AS INDICATED ON THE DRAWINGS.
   - I. SEPARATE AND STOCK PILE ALL EXCAVATED MATERIALS SUITABLE FOR BACKFILL. ALL EXCESS EXCAVATED AND UNSUITABLE MATERIALS SHALL BE DISPOSED OF OFF-SITE IN A LEGAL MANNER.
   - J. DURING EXCAVATION, THE CONTRACTOR SHALL PROVIDE SHORING, SHEETING, AND BRACING AS REQUIRED TO PREVENT CAVING OR SLOUGHING OF EXCAVATION.

2. BACKFILL:
   - A. AS SOON AS PRACTICAL, AFTER COMPLETING CONSTRUCTION OF THE RELATED STRUCTURE, INCLUDING EXPIRATION OF THE SPECIFIED MINIMUM CURING PERIOD FOR CAST-IN-PLACE CONCRETE, BACKFILL THE EXCAVATION WITH APPROVED MATERIAL TO RESTORE THE REQUIRED FINISHED GRADE.
   - B. PRIOR TO PLACING BACKFILL AROUND STRUCTURES, ALL FORMS SHALL BE REMOVED AND THE EXCAVATION CLEANED OF ALL TRASH, DEBRIS, AND UNSUITABLE MATERIALS.
   - C. DO NOT PLACE FROZEN MATERIAL IN AS BACKFILL.
   - D. PLACE BACKFILL MATERIAL OR SELECT GRANULAR BACKFILL MATERIAL WHEN REQUIRED IN UNIFORM HORIZONTAL LAYERS OF NO GREATER THAN 8-INCHES LOOSE THICKNESS AND COMPACT TO THE SAME DENSITY AS NATIVE SOIL. WHERE HAND OPERATED COMPACTORS ARE USED, THE FILL MATERIAL SHALL BE PLACED IN LIFTS NOT TO EXCEED 4 INCHES IN LOOSE DEPTH AND COMPACTED.
   - E. WHENEVER TESTING INDICATES THAT THE CONTRACTOR HAS NOT OBTAINED THE SPECIFIED DENSITY, THE SUCCEEDING LAYER SHALL NOT BE PLACED UNTIL THE REQUIREMENTS ARE MET UNLESS OTHERWISE AUTHORIZED BY THE CONSTRUCTION MANAGER. THE CONTRACTOR SHALL TAKE WHATEVER APPROPRIATE ACTION IS NECESSARY, SUCH AS DRYING, ADDING WATER, OR INCREASING THE COMPACTIVE EFFORT TO MEET THE COMPACTION REQUIREMENTS.

3. TRENCH EXCAVATION:
   - A. UTILITY TRENCHES SHALL BE EXCAVATED TO THE LINES AND GRADES SHOWN ON THE DRAWINGS OR AS DIRECTED BY THE GENERAL CONTRACTOR. PROVIDE SHORING, SHEETING AND BRACING AS REQUIRED TO PREVENT CAVING OR SLOUGHING OF THE TRENCH WALLS.

GENERAL SITE WORK NOTES CONT.

   - B. EXTEND THE TRENCH WIDTH A MINIMUM OF 6 INCHES BEYOND THE OUTSIDE EDGE OF THE OUTERMOST CONDUIT.
   - C. WHEN SOFT YIELDING, OR OTHERWISE UNSTABLE SOIL CONDITIONS ARE ENCOUNTERED, EXCAVATE THE REQUIRED TRENCH TO A DEPTH OF NO LESS THAN 12 INCHES BELOW THE REQUIRED ELEVATION, THEN BACKFILL WITH 12" OF GRANULAR BEDDING MATERIAL.

4. TRENCH BACKFILL:
   - A. PROVIDE GRANULAR BEDDING MATERIAL OR FLOWABLE FILL IN ACCORDANCE WITH THE DRAWINGS AND THE UTILITY REQUIREMENTS.
   - B. NOTIFY THE GENERAL CONTRACTOR 24 HOURS IN ADVANCE OF BACKFILLING.
   - C. CONDUCT UTILITY CHECK TESTS BEFORE BACKFILLING. BACKFILL AND COMPACT TRENCH BEFORE ACCEPTANCE TESTING.
   - D. PLACE GRANULAR TRENCH BACKFILL UNIFORMLY ON BOTH SIDES OF THE CONDUITS IN 6-INCH UNCOMPACTED LIFTS UNTIL 12 INCHES OVER THE CONDUITS. SOLIDLY RAM AND TAMP BACKFILL INTO SPACE AROUND CONDUITS.
   - E. PROTECT CONDUIT FROM LATERAL MOVEMENT, IMPACT DAMAGE, OR UNBALANCED LOADING.
   - F. ABOVE THE CONDUIT EMBEDMENT ZONE, PLACE AND COMPACT SATISFACTORY BACKFILL MATERIAL IN 8-INCH MAXIMUM LOOSE THICKNESS LIFTS TO RESTORE THE REQUIRED FINISHED SURFACE GRADE.
   - G. COMPACT FINAL TRENCH BACKFILL TO A DENSITY EQUAL TO OR GREATER THAN THAT OF THE EXISTING UNDISTURBED MATERIAL IMMEDIATELY ADJACENT TO THE TRENCH.

5. FINISH GRADING:
   - A. PERFORM ALL GRADING TO PROVIDE POSITIVE DRAINAGE AWAY FROM STRUCTURES AND SMOOTH, EVEN SURFACE DRAINAGE OF THE ENTIRE AREA WITHIN THE LIMITS OF CONSTRUCTION. GRADING SHALL BE COMPATIBLE WITH ALL SURROUNDING TOPOGRAPHY AND STRUCTURES.
   - B. UTILIZE SATISFACTORY FILL MATERIAL RESULTING FROM THE EXCAVATION WORK IN THE CONSTRUCTION OF FILLS, EMBANKMENTS AND FOR REPLACEMENT OF REMOVED UNSUITABLE MATERIALS.
   - C. REPAIR ALL ACCESS ROADS AND SURROUNDING AREAS USED DURING THE COURSE OF THIS WORK TO THEIR ORIGINAL CONDITION.

6. ASPHALT PAVING ROAD:
   - A. CONTRACTOR RESPONSIBLE FOR RE-STRIPING AND APPLYING SEALCOATING, UNLESS OTHERWISE.
   - B. WASHINGTON DOT STANDARD SPECIFICATION - CURRENT EDITION.

7. STAGING:
   - A. WORK / STAGING AREA TO BE CONFIRMED AT PRE-CONSTRUCTION SITE MEETING AND SURROUNDED BY TEMPORARY FENCE (SEE DETAIL BELOW) DURING CONSTRUCTION.
   - B. POSSIBLE LOCATION FOR TEMPORARY DRIVE AISLE CLOSURE DURING CONSTRUCTION.
   - C. CONTRACTOR TO PROVIDE TEMPORARY SIGNS TO DIRECT TRAFFIC FLOW.
   - D. SHORT TERM FENCING TO BE PROVIDED OUTSIDE OF TEMPORARY FENCE FOR ANY OPEN TRENCHES LEFT OVER NIGHT OR UNATTENDED.
   - E. TEMPORARY FENCE SHALL BE CLOSED AND LOCKED AT ALL TIMES. IF GATE MUST BE OPEN FOR MOVING EQUIPMENT OR MATERIALS, A SPOTTER SHALL BE PROVIDED TO TO PREVENT UNAUTHORIZED ENTRY.
   - F. NO EQUIPMENT OR MATERIALS SHALL BE STORED OUTSIDE THE TEMPORARY FENCE FOR ANY AMOUNT OF TIME.

FIBER OPTIC NOTES

USE CABLE WITH THE FOLLOWING MINIMUM PROPERTIES:

1. HIGH TENSILE STRENGTH >150 LB
2. TIGHT BUFFERED
3. INDOOR / OUTDOOR UV AND MOISTURE RESISTANT " RISER" CABLE
4. CONNECTOR TYPE: ST-ST
5. FIBER TYPE: MULTI-MODE 6-FIBER (3 PAIR) 62.5UM. 6 CONNECTORS ON BOTH ENDS.
6. JACKET: INDOOR/OUTDOOR RISER, BLACK
7. BREAKOUT: SIDE A: INNER END - 24 INCHES WITH 2MM FURCATION

   7.A. SIDE B: OUTER END - 24 INCHES - 2MM FURCATION - STAGGERED EVERY 1"

8. WITH PULLING EYE ON SIDE B (OUTER END) AND SPOOL REEL

electrify america

ELECTRIFY AMERICA, LLC.
2003 EDMUND HALLEY DRIVE
SUITE 200
RESTON, VA 20191

Kimley»Horn

4582 S. ULSTER STREET
SUITE 1500
DENVER, CO 80237
303-288-2300

Job Name:

THE OUTLETS COLLECTION

1101 OUTLET COLLECTION WAY
AUBURN, WA 98001

SHEET DESCRIPTION:
GENERAL NOTES

KYLE WATSON
STATE OF WASHINGTON
REGISTERED
PROFESSIONAL ENGINEER

Project #: 210216
File: CONSTRUCTION DOCUMENTS
Drawn by: JWM
Date(s): 10/05/2019
11/26/2019 REV #1 CD90 PLANS
5/19/2020 REV #2 CD100 PLANS

GN-2

K:\DEN_CIVIL\096867000_ELECTRIFY AMERICA\WA210216 – OUTLETS COLLECTION (AUBURN, WA)\CADD\PLANSHEETS\COVER SHEET AND GENERAL NOTES.DWG

STRUCTURAL STEEL NOTES

1. STRUCTURAL STEEL SHALL CONFORM TO THE FOLLOWING REQUIREMENTS, UNLESS NOTED OTHERWISE: WIDE FLANGE SHAPE: A992, 50KSI
   ANGLE AND CHANNEL SHAPE: ASTM A36, 36 KSI PLATE: ASTM A36, 36KSI
   PIPE: ASTM A53 GRADE B, 35 KSI
   HSS: ASTM A500 GRADE B, 46KSI
2. HIGH-STRENGTH BOLTS SHALL CONFORM TO ASTM A325: ONE HIGH-STRENGTH BOLT ASSEMBLY SHALL CONSIST OF A HEAVY HEX STRUCTURAL BOLT, A HEAVY NUT, A HARDENED WASHER CONFORMING TO ASTM F436. THE HARDENED WASHER SHALL BE INSTALLED AGAINST ELEMENT TURNED IN TIGHTENING. UNLESS NOTED OTHERWISE ON THE DRAWINGS, ALL CONNECTIONS SHALL BE BEARING TYPE CONNECTIONS.
3. WELDING ELECTRODES SHALL COMPLY WITH AWS D1.1 USING A5.1 OR A5.5 E70XX AND SHALL BE COMPATIBLE WITH THE WELDING PROCESS SELECTED. WELDERS SHALL BE QUALIFIED AS PRESCRIBED IN AWS D1.1.
4. UNLESS NOTED OTHERWISE ON THE DRAWING, ALL ANCHOR BOLTS SHALL CONFORM TO ASTM F1554 WITH HEAVY HEXAGONAL NUT.
5. FABRICATE ITEMS OF STRUCTURAL STEEL IN ACCORDANCE WITH AISC SPECIFICATION.
6. ALL EXPOSED STRUCTURAL STEEL AND BOLTS SHALL BE HOT DIP GALVANIZED PER ASTM A123.
7. SUBMIT FABRICATION AND ERECTION DRAWINGS SHOWING ALL DETAILS, CONNECTIONS, MATERIAL DESIGNATIONS, AND TOP STEEL ELEVATIONS FOR APPROVAL. THE SHOP DRAWINGS WILL BE REVIEWED FOR GENERAL CONFORMANCE TO THE CONTRACT DRAWINGS. SUCH APPROVAL SHALL NOT RELIEVE THE FABRICATOR/CONTRACTOR OF THE RESPONSIBILITY FOR EITHER THE ACCURACY OF THE DETAILED DIMENSIONS IN THE SHOP AND ERECTION DRAWINGS OR THE GENERAL FIT-UP OF PARTS THAT ARE TO BE ASSEMBLED IN THE FIELD.
8. PRIMER SHALL BE RED OXIDE-CHROMATE PRIME COMPLYING WITH STEEL STRUCTURES PAINTING COUNCIL (SSPC) PAINT SPECIFICATION NUMBER 11

ANCHORAGE INSTALLATION NOTES

1. DRILLING THROUGH EXISTING SLAB REBAR DURING POST-INSTALLED ANCHOR BOLTS INSTALLATION IS NOT PERMITTED.
2. POST-INSTALLED ANCHOR BOLT INSTALLATION SHALL BE PERFORMED BY PERSONNEL TRAINED TO INSTALL THE SYSTEM PER THE MANUFACTURER'S PRINTED INSTALLATION INSTRUCTIONS (MPII), AS INCLUDED IN THE ANCHOR PACKAGING.
3. EXPANSION AND ADHESIVE ANCHORS SHALL BE INSTALLED PER THE MANUFACTURER'S INSTRUCTIONS USING STANDARD EMBEDMENTS AND EDGE DISTANCES UNLESS NOTED OTHERWISE ON THE DRAWINGS.

REINFORCED CONCRETE NOTES

1. CONCRETE SHALL ATTAIN A MINIMUM COMPRESSIVE STRENGTH OF 3000 PSI IN 28 DAYS UNLESS OTHERWISE NOTED CONTINUOUS INSPECTION IS NOT REQUIRED. SLUMP: 4" MIN / 6" MAX.
   i. AIR ENTRAINMENT: 4 1/2% - 7% BY VOLUME
2. REINFORCEMENT SHALL BE A NEW BILLET STEEL DEFORMED BARS CONFORMING TO ASTM SPECIFICATION A615 GRADE 60, MAXIMUM COARSE AGGREGATE SIZE SHALL BE 3/4".
3. REINFORCEMENT SHALL COMPLY WITH THE LATEST EDITION OF ACI 318 FOR MINIMUM CLEARANCES AND CONCRETE COVER.
4. ALL EMBEDDED ITEMS SHALL BE SECURELY HELD IN POSITION PRIOR TO PLACEMENT OF CONCRETE. ALL CONCRETE SHALL BE READY-MIXED IN ACCORDANCE WITH ASTM C94.
5. MAINTAIN TEMPERATURE OF CAST IN PLACE CONCRETE BETWEEN 50 DEGREES AND 90 DEGREES FAHRENHEIT.
6. DO NOT USE RETEMPERED CONCRETE, OR ADD WATER TO READY-MIX CONCRETE AT THE JOB SITE
7. WELDED WIRE FABRIC SHALL CONFORM TO ASTM A185.7.
8. EXCEPT AS DETAILED OR AUTHORIZED, MAKE BARS CONTINUOUS AROUND CORNERS WHERE PERMITTED, SPLICES MADE BY CONTACT LAPS SHALL BE CLASS "B" TENSION LAPS UNLESS NOTED OTHERWISE.
9. DETAIL BARS IN ACCORDANCE WITH "ACI DETAILING MANUAL", PUBLICATION SP-66 AND " BUILDING CODE REQUIREMENTS FOR REINFORCED CONCRETE" , ACI 318.
10. PROVIDE ACCESSORIES NECESSARY TO PROPERLY SUPPORT REINFORCING.
11. EXPANSION JOINTS SHALL BE CONSTRUCTED AT LOCATIONS WHERE THE CONCRETE PAD ABUTS CONCRETE CURBS, DRIVEWAYS, AND SIMILAR STRUCTURES, AND AS SHOWN ON APPROVED PLANS. EXPANSION JOINTS SHALL BE FORMED WITH ONE-HALF INCH PRE-FABRICATED NON-EXTRUDING FILLER AND SHALL EXTEND THE FULL DEPTH OF THE SLAB.

GROUNDING NOTES

1. COAT ALL SURFACES WITH AN ANTI-OXIDANT COMPOUND BEFORE MATING.
2. FOR GROUND BOND TO STEEL ONLY: INSERT A CADMIUM FLAT WASHER BETWEEN LUG AND STEEL, COAT ALL SURFACES WITH AN ANTI-OXIDANT COMPOUND BEFORE MATING.
3. ENSURE THE WIRE INSULATION TERMINATION IS WITHIN 1/8" OF THE BARREL (NO SHINERS).
4. ALL BELOW GRADE BONDS TO BE EXOTHERMIC WELDS OR IRREVERSIBLE COMPRESSION-TYPE CONNECTIONS LISTED FOR USE IN THE APPLICATION WHICH THEY ARE INSTALLED.
5. ALL HARDWARE SHALL BE STAINLESS STEEL 3/8" DIAMETER OR LARGER. ALL HARDWARE 18-8 STAINLESS STEEL INCLUDING LOCK WASHERS, COAT ALL SURFACES WITH AN ANTI-OXIDANT COMPOUND BEFORE MATING.
6. 2014 NEC 250.121 EXCEPTION: A WIRE-TYPE EQUIPMENT GROUNDING CONDUCTOR INSTALLED IN COMPLIANCE WITH 250.6(A) AND THE APPLICABLE REQUIREMENTS FOR BOTH THE EQUIPMENT GROUNDING CONDUCTOR AND THE GROUNDING ELECTRODE CONDUCTOR IN PARTS II, III, AND VI OF THIS ARTICLE SHALL BE PERMITTED TO SERVE AS BOTH AN EQUIPMENT GROUNDING CONDUCTOR AND A GROUNDING ELECTRODE CONDUCTOR.

electrify america

ELECTRIFY AMERICA, LLC.
2003 EDMUND HALLEY DRIVE
SUITE 200
RESTON, VA 20191

Kimley»Horn

4582 S. ULSTER STREET
SUITE 1500
DENVER, CO 80237
303-288-2300

Job Name:
THE OUTLETS COLLECTION

1101 OUTLET COLLECTION WAY
AUBURN, WA 98001

SHEET DESCRIPTION:
GENERAL NOTES

Project #: 210216
File: CONSTRUCTION DOCUMENTS
Drawn by: JWM
Date(s): 10/05/2019
11/26/2019 REV #1 CD90 PLANS
5/19/2020 REV #2 CD100 PLANS

GN-3

K:\DEN_CIVIL\096867000_ELECTRIFY_AMERICA\WA210216 — OUTLETS COLLECTION (AUBURN, WA)\CADD\PLANSHEETS\COVER SHEET AND GENERAL NOTES.DWG

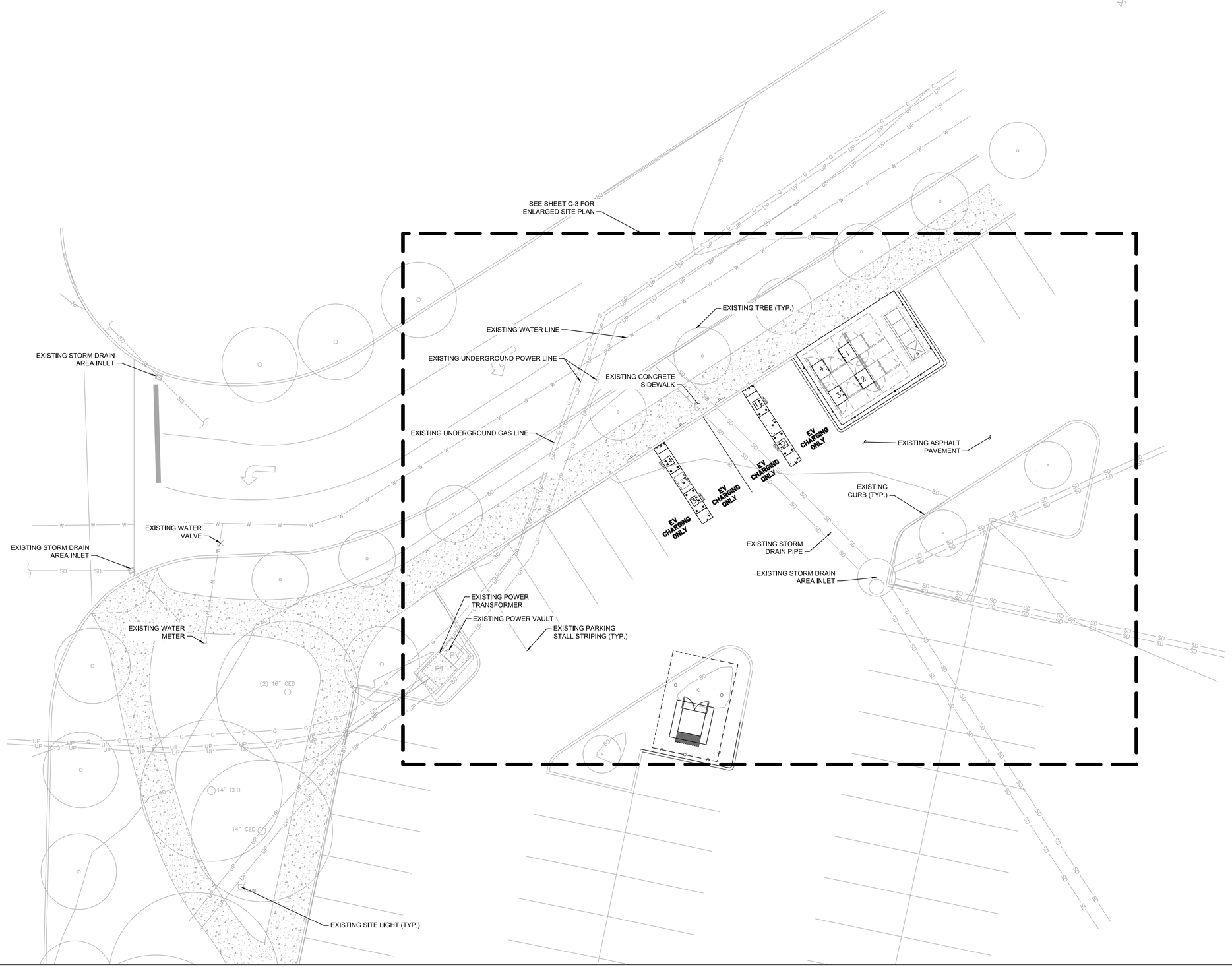

A
C-1

OVERALL SITE PLAN

NORTH

GRAPHIC SCALE IN FEET
0 5 10 20

K:\DEN_CIVIL\096867000_ELECTRIFY AMERICA\WA210216 - OUTLETS COLLECTION (AUBURN, WA)\CADD\PLANSHEETS\CD50'S.DWG

electrify america

ELECTRIFY AMERICA, LLC.
2003 EDMUND HALLEY DRIVE
SUITE 200
RESTON, VA 20191

Kimley»Horn

4582 S. ULSTER STREET
SUITE 1500
DENVER, CO 80237
303-288-2300

Job Name:

THE OUTLETS COLLECTION

1101 OUTLET COLLECTION WAY
AUBURN, WA 98001

SHEET DESCRIPTION:
OVERALL SITE PLAN

KYLE WATSON
STATE OF WASHINGTON
REGISTERED
PROFESSIONAL ENGINEER

Project #: 210216
File: CONSTRUCTION DOCUMENTS
Drawn by: JWM
Date(s): 10/05/2019
11/26/2019 REV #1 CD90 PLANS
5/19/2020 REV #2 CD100 PLANS

C-1

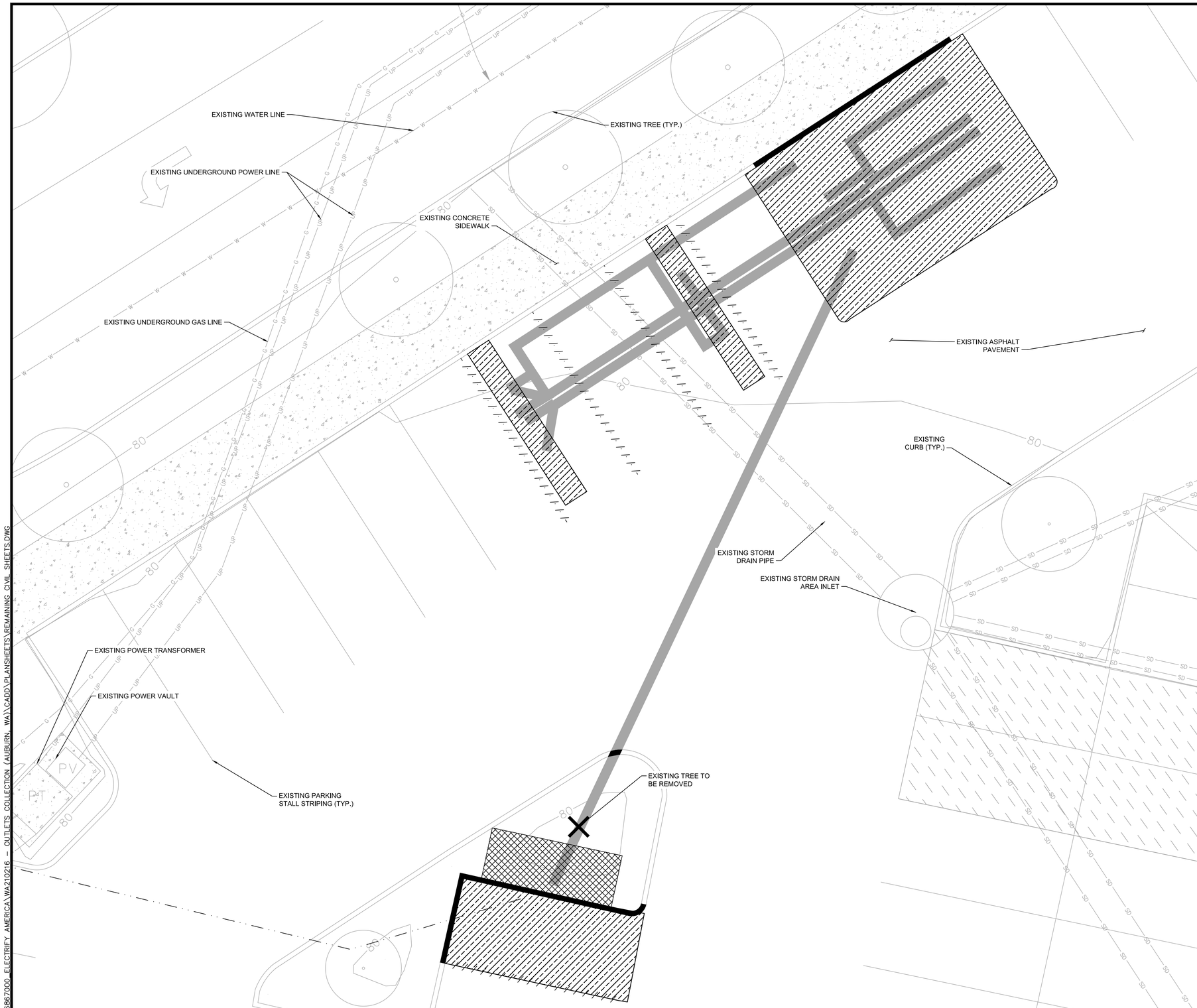

A
C-2

DEMOLITION PLAN

DEMO QUANTITIES TABLE

	ASPHALT	803 SQ FT
	PARKING LINES	GRINDING
	CURB	58 LF
	LANDSCAPING	75 SQ FT
	UTILITY TRENCH	±301 LF
	UTILITY BORE	±214 LF
	TREE REMOVAL	1 EA

NOTES

1. THE CONTRACTOR SHALL RETURN SIDEWALKS, LANDSCAPING, PLANTERS, IRRIGATION SYSTEMS, AND ANY OTHER FACILITIES DISTURBED BY THE WORK TO THE SAME OR BETTER CONDITION THAN EXISTED PRIOR TO THE COMMENCEMENT OF THE WORK.
2. ALL QUANTITIES LISTED IN DEMOLITION PLAN SHEET ARE ONLY APPROXIMATIONS. THE CONTRACTOR SHALL VERIFY ALL QUANTITIES BEFORE BIDDING.
3. TRENCHING IS TO BE USED EXCEPT IN HEAVY TRAFFIC AREAS, MAIN DRIVE AISLES AND ACROSS STORE ENTRANCE.
4. THE CONTRACTOR SHALL PROTECT EXISTING INFRASTRUCTURE IN PLACE WITHIN THE AREA OF IMPROVEMENTS

NORTH

GRAPHIC SCALE IN FEET
0 2.5 5 10

electrify america
ELECTRIFY AMERICA, LLC.
2003 EDMUND HALLEY DRIVE
SUITE 200
RESTON, VA 20191

Kimley»Horn
4582 S. ULSTER STREET
SUITE 1500
DENVER, CO 80237
303-288-2300

Job Name:
THE OUTLETS COLLECTION

1101 OUTLET COLLECTION WAY
AUBURN, WA 98001

SHEET DESCRIPTION:
DEMOLITION PLAN

KYLE WASTON
STATE OF WASHINGTON
REGISTERED
PROFESSIONAL ENGINEER

Project #: 210216
File: CONSTRUCTION DOCUMENTS
Drawn by: JWM
Date(s): 10/05/2019
11/26/2019 REV #1 CD90 PLANS
5/19/2020 REV #2 CD100 PLANS

C-2

K:\DEN_CIVIL\096867000_ELECTRIFY AMERICA\WA210216 - OUTLETS COLLECTION (AUBURN, WA)\CADD\PLANSHEETS\REMAINING CIVIL SHEETS.DWG

NOTES

1. SOD PLANTED IN THE FALL MUST ESTABLISH ITS ROOTS BEFORE THE FIRST WINTER FROST. DETERMINE WHEN THE FIRST FROST USUALLY OCCURS, AND PLANT THE SOD NO LATER THAN ONE MONTH BEFORE THE FIRST FROST. IF THE CONSTRUCTION IS FINISHED LATER THAN ONE MONTH BEFORE THE FIRST FROST, USE STRAW UNTIL SOD CAN BE INSTALLED.
2. THE CONTRACTOR SHALL RETURN SIDEWALKS, LANDSCAPING, PLANTERS, IRRIGATION SYSTEMS, AND ANY OTHER FACILITIES DISTURBED BY THE WORK TO THE SAME OR BETTER CONDITION THAN EXISTED PRIOR TO THE COMMENCEMENT OF THE WORK.
3. ALL BOLLARDS ARE TO BE POURED AT THE SAME TIME AS THE EQUIPMENT PAD.
4. DISTURBED AREA OUTSIDE OF THE TRANSFORMER PAD AND CONCRETE EQUIPMENT PAD SHALL BE COVERED WITH MULCH.

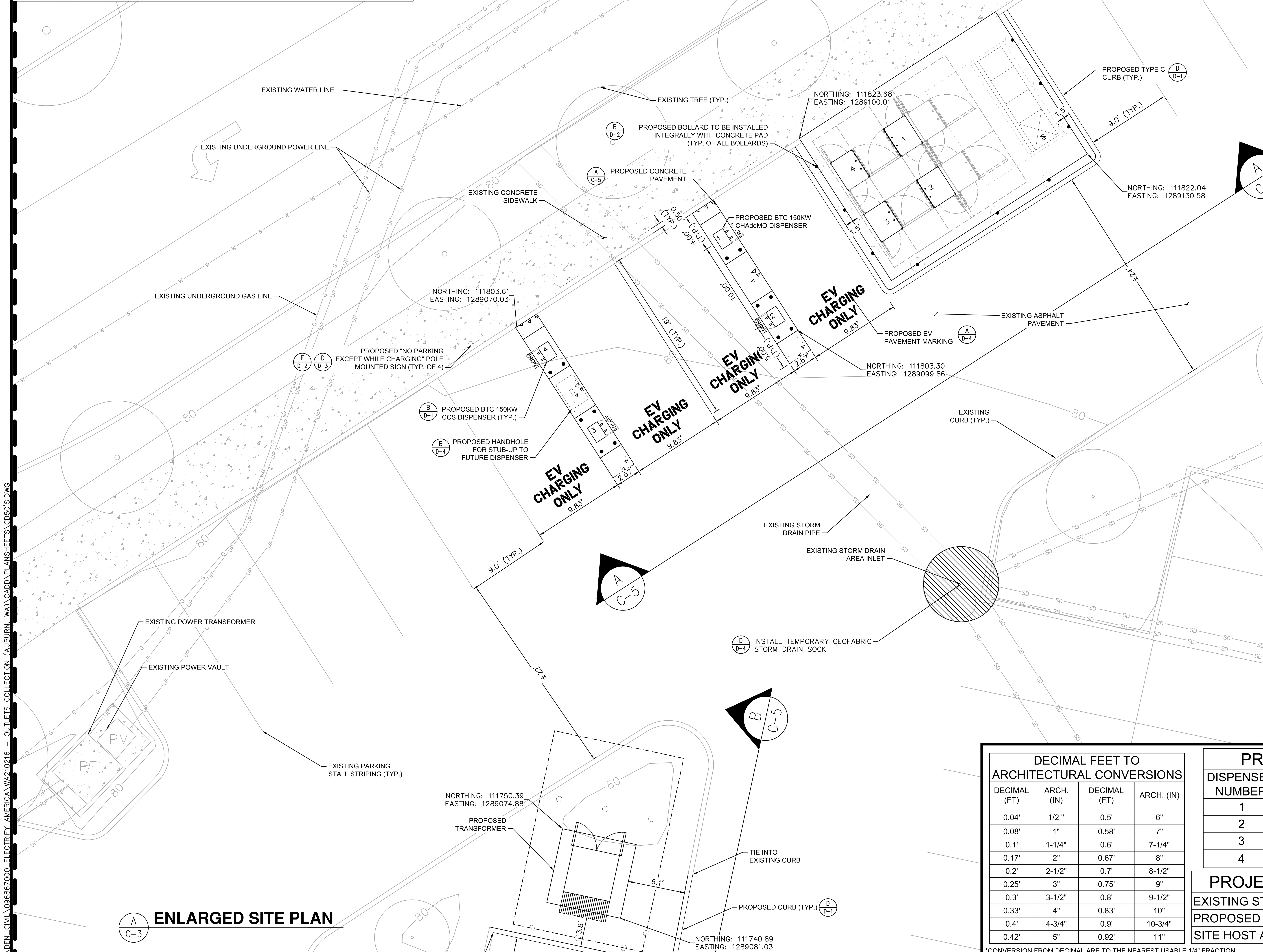

A C-3 **ENLARGED SITE PLAN**

CURB LEGEND

TYPE C HEADER CURB

PROJECT TYPE: METRO
EA EQUIPMENT: BTC
EA BATTERY STG: NO BATTERY
LOCAL UTILITY: PUGET SOUND ENERGY

NORTH

GRAPHIC SCALE IN FEET: 0 2.5 5 10

DECIMAL FEET TO ARCHITECTURAL CONVERSIONS

DECIMAL (FT)	ARCH. (IN)	DECIMAL (FT)	ARCH. (IN)
0.04'	1/2 "	0.5'	6"
0.08'	1"	0.58'	7"
0.1'	1-1/4"	0.6'	7-1/4"
0.17'	2"	0.67'	8"
0.2'	2-1/2"	0.7'	8-1/2"
0.25'	3"	0.75'	9"
0.3'	3-1/2"	0.8'	9-1/2"
0.33'	4"	0.83'	10"
0.4'	4-3/4"	0.9'	10-3/4"
0.42'	5"	0.92'	11"

*CONVERSION FROM DECIMAL ARE TO THE NEAREST USABLE 1/4" FRACTION

PROPOSED DISPENSER

DISPENSER NUMBER	150 KW	CABLE TYPE
1	X	CHAdeMO/CCS
2	X	CCS
3	X	CCS
4	X	CCS

PROJECT AREA STALL COUNT

EXISTING STALL COUNT	9
PROPOSED STALL COUNT	4
SITE HOST APPROVED STALL COUNT	10

electrify america

ELECTRIFY AMERICA, LLC.
2003 EDMUND HALLEY DRIVE
SUITE 200
RESTON, VA 20191

Kimley»Horn

4582 S. ULSTER STREET
SUITE 1500
DENVER, CO 80237
303-288-2300

Job Name:

THE OUTLETS COLLECTION

1101 OUTLET COLLECTION WAY
AUBURN, WA 98001

SHEET DESCRIPTION:
ENLARGED SITE PLAN

KYLE WATSON STATE OF WASHINGTON REGISTERED PROFESSIONAL ENGINEER

Project #: 210216
File: CONSTRUCTION DOCUMENTS
Drawn by: JWM
Date(s): 10/05/2019
11/26/2019 REV #1 CD90 PLANS
5/19/2020 REV #2 CD100 PLANS

C-3

K:\DEN_CIVIL\096867000_ELECTRIFY_AMERICA\WA210216 – OUTLETS COLLECTION (AUBURN, WA)\CADD\PLANSHEETS\CD50'S.DWG

NOTES

1. CONTRACTOR TO SLOPE PAD 1-2% TO PROVIDE POSITIVE DRAINAGE.

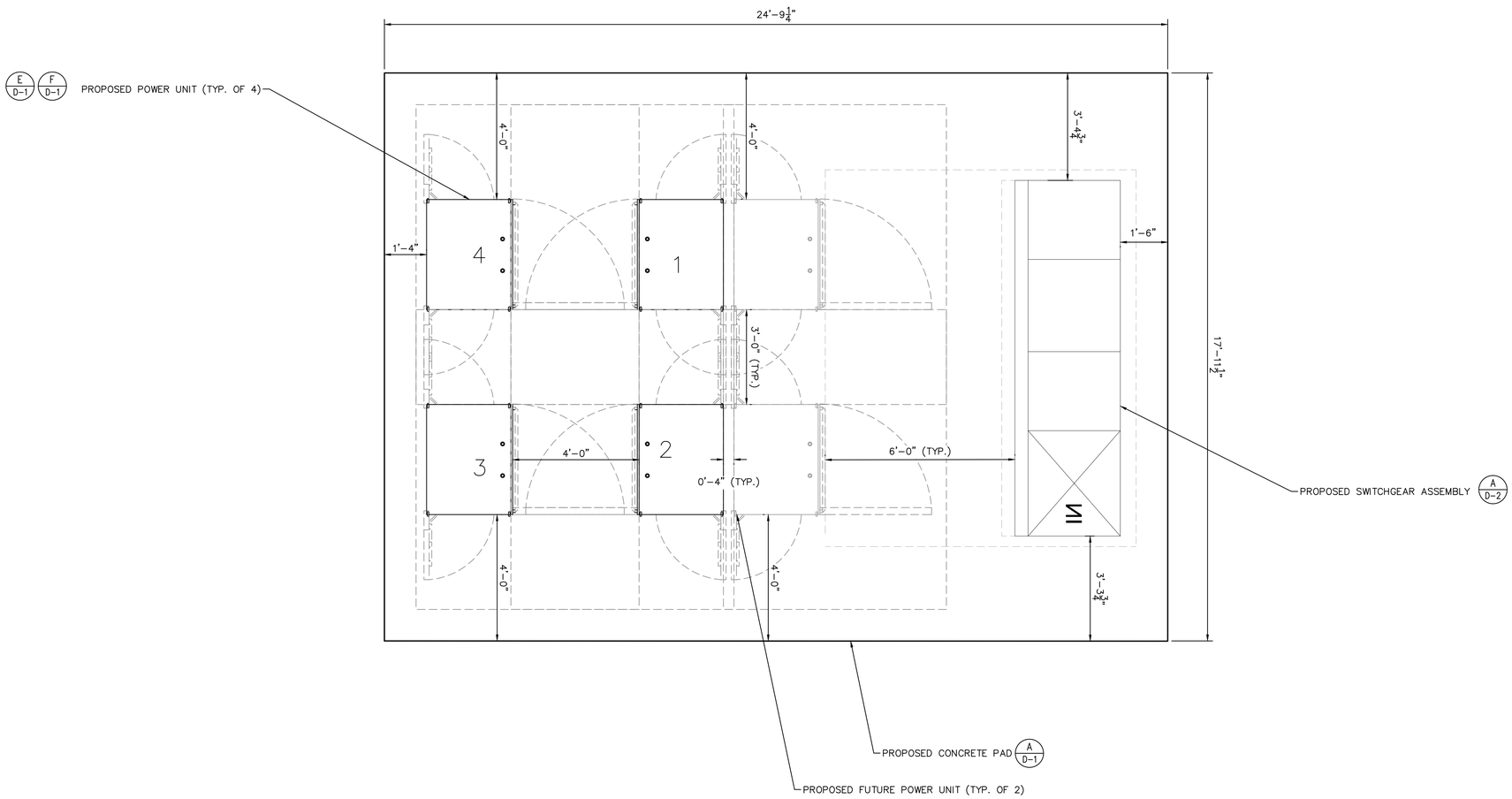

A C-4 **ENLARGED EQUIPMENT LAYOUT**

NORTH

GRAPHIC SCALE IN FEET
0 1 2 4

electrify america

ELECTRIFY AMERICA, LLC.
2003 EDMUND HALLEY DRIVE
SUITE 200
RESTON, VA 20191

Kimley»Horn

4582 S. ULSTER STREET
SUITE 1500
DENVER, CO 80237
303-288-2300

Job Name:

THE OUTLETS COLLECTION

1101 OUTLET COLLECTION WAY
AUBURN, WA 98001

SHEET DESCRIPTION:
ENLARGED EQUIPMENT LAYOUT

KYLE WATSON
STATE OF WASHINGTON
REGISTERED
PROFESSIONAL ENGINEER

Project #: 210216
File: CONSTRUCTION DOCUMENTS
Drawn by: JWM
Date(s): 10/05/2019
11/26/2019 REV #1 CD90 PLANS
5/19/2020 REV #2 CD100 PLANS

C-4

K:\DEN_CIVIL\096867000_ELECTRIFY AMERICA\WA210216 - OUTLETS COLLECTION (AUBURN, WA)\CADD\PLANSHEETS\REMAINING CIVIL SHEETS.DWG

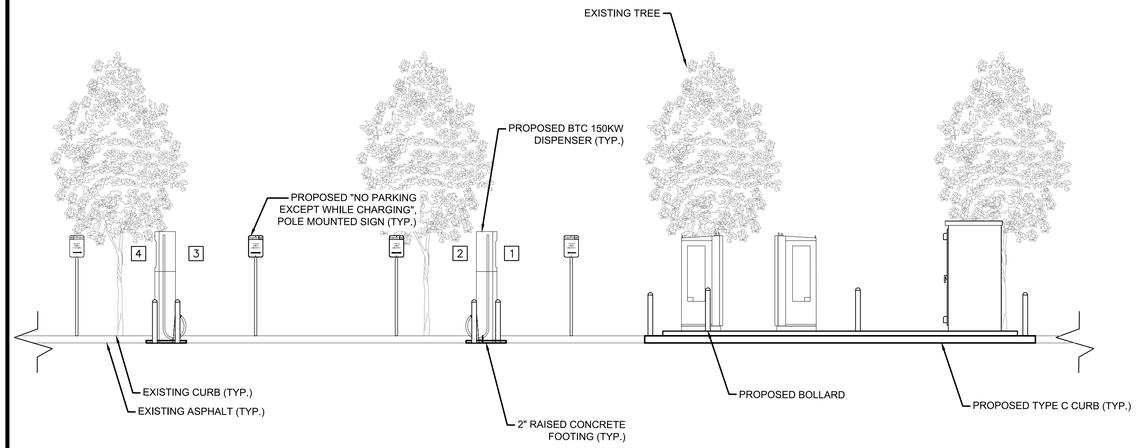

GRAPHIC SCALE IN FEET
0 2.5 5 10

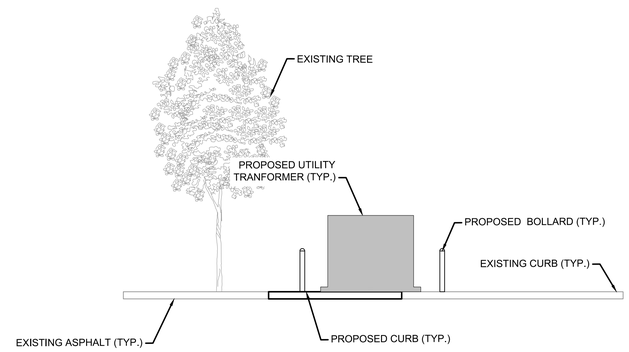

GRAPHIC SCALE IN FEET
0 2.5 5 10

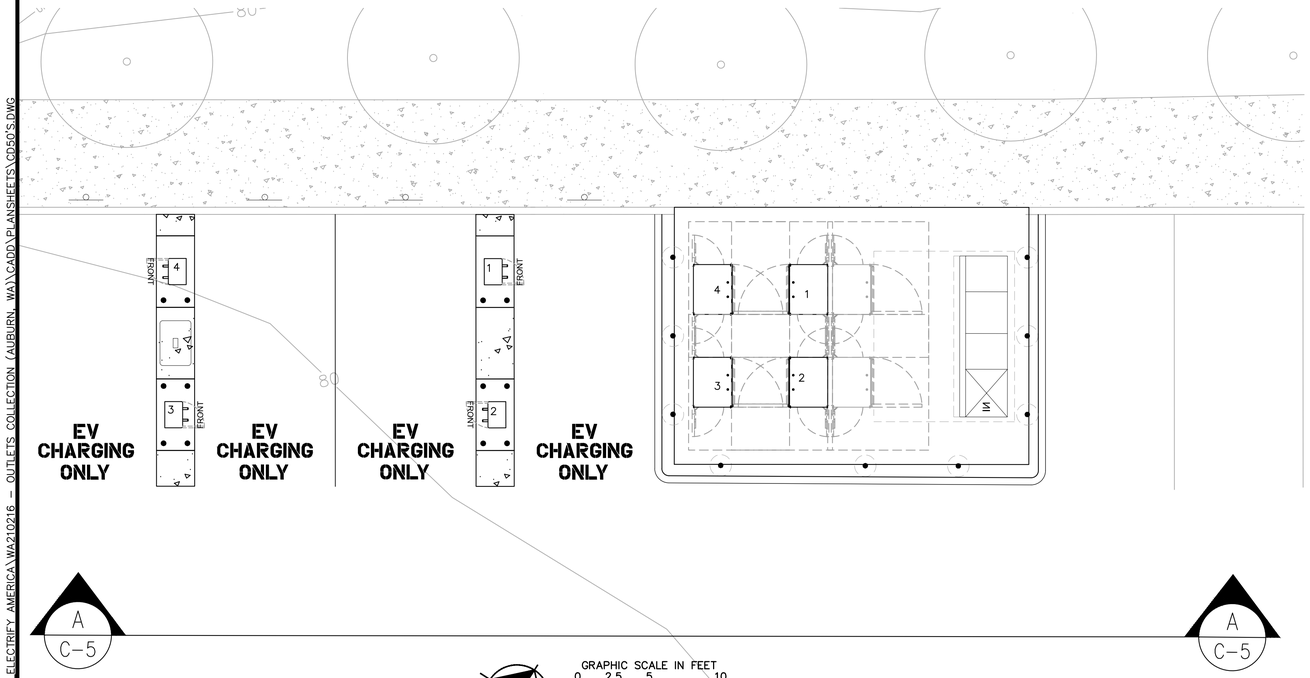

GRAPHIC SCALE IN FEET
0 2.5 5 10

A C-5 **SITE ELEVATION**

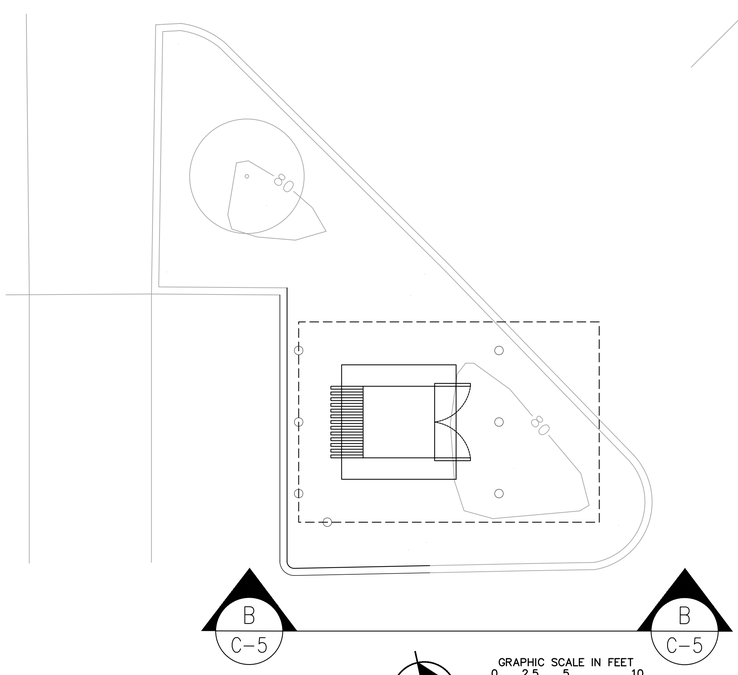

GRAPHIC SCALE IN FEET
0 2.5 5 10

PLAN INSETS FOR REFERENCE ONLY

K:\DEN_CIVIL\096867000_ELECTRIFY AMERICA\WA210216 - OUTLETS COLLECTION (AUBURN, WA)\CADD\PLANSHEETS\CD50'S.DWG

electrify america

ELECTRIFY AMERICA, LLC.
2003 EDMUND HALLEY DRIVE
SUITE 200
RESTON, VA 20191

Kimley»Horn

4582 S. ULSTER STREET
SUITE 1500
DENVER, CO 80237
303-288-2300

Job Name:

THE OUTLETS COLLECTION

1101 OUTLET COLLECTION WAY
AUBURN, WA 98001

SHEET DESCRIPTION:
SITE ELEVATIONS

KYLE WATSON
STATE OF WASHINGTON
20108526
REGISTERED PROFESSIONAL ENGINEER

Project #: 210216
File: CONSTRUCTION DOCUMENTS
Drawn by: JWM
Date(s): 10/05/2019
11/26/2019 REV #1 CD90 PLANS
5/19/2020 REV #2 CD100 PLANS

C-5

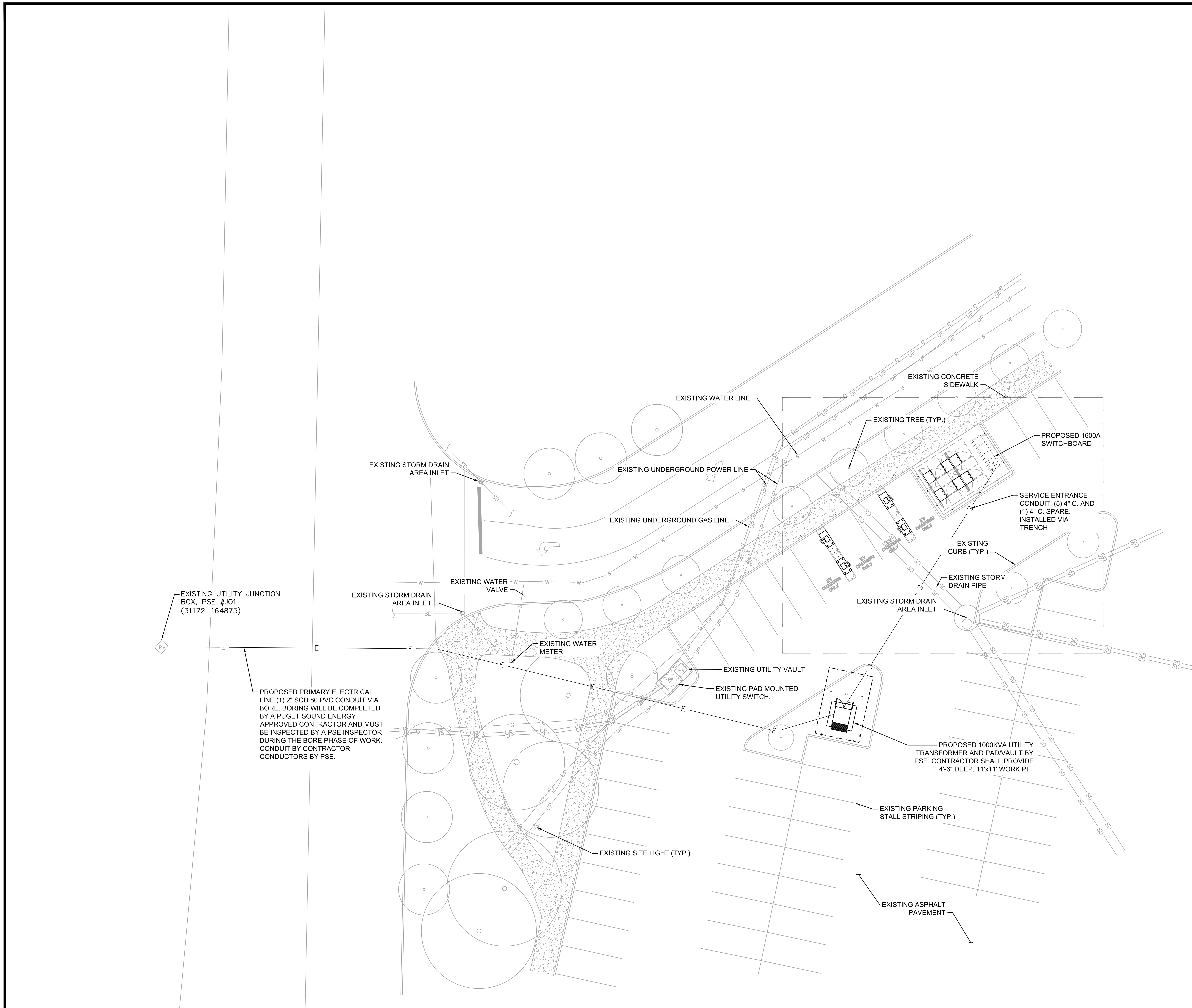

A
E-1
UTILITY PLAN

KEYNOTES

1. THE UTILITY DESIGN DETAILS SUMMARIZED ON THIS SHEET ARE FOR PROPERTY OWNER REVIEW. THE CONTRACTOR SHALL REFERENCE THE UTILITY DESIGN PACKAGE (UDP), PROVIDED WITH THE " ISSUED FOR CONSTRUCTION" DRAWINGS FOR BIDDING. THE CONTRACTOR SHALL INSTALL THE UTILITY RELATED SCOPE OF WORK PER UTILITY CONSTRUCTION SPECIFICATION REQUIREMENTS.
2. UTILITY EQUIPMENT INSTALLATIONS AND PREP WORK AND TERMINATION OF SERVICE CONDUCTORS SHALL BE COORDINATED WITH THE APPROPRIATE UTILITY ENGINEER AT TIME OF PRE-CONSTRUCTION MEETING TO ENSURE ACCURACY OF INSTALLATIONS.
3. TRANSFORMER BOLLARD PROTECTION TO BE INSTALLED PER UTILITY SPECIFICATION. ADDITIONAL BOLLARD PROTECTION MAY BE REQUIRED AT THE DISCRETION OF THE UTILITY FIELD INSPECTION PERSONNEL.

NORTH

GRAPHIC SCALE IN FEET
0 7.5 15 30

electrify america

ELECTRIFY AMERICA, LLC.
2003 EDMUND HALLEY DRIVE
SUITE 200
RESTON, VA 20191

Kimley»Horn

4582 S. ULSTER STREET
SUITE 1500
DENVER, CO 80237
303-288-2300

Job Name:
THE OUTLETS COLLECTION

1101 OUTLET COLLECTION WAY
AUBURN, WA 98001

SHEET DESCRIPTION:
UTILITY PLAN

DUSTIN J. COLWELL
STATE OF WASHINGTON
REGISTERED PROFESSIONAL ENGINEER

Project #: 210216
File: CONSTRUCTION DOCUMENTS
Drawn by: JWM
Date(s): 10/05/2019
11/26/2019 REV #1 CD90 PLANS
5/19/2020 REV #2 CD100 PLANS

E-1

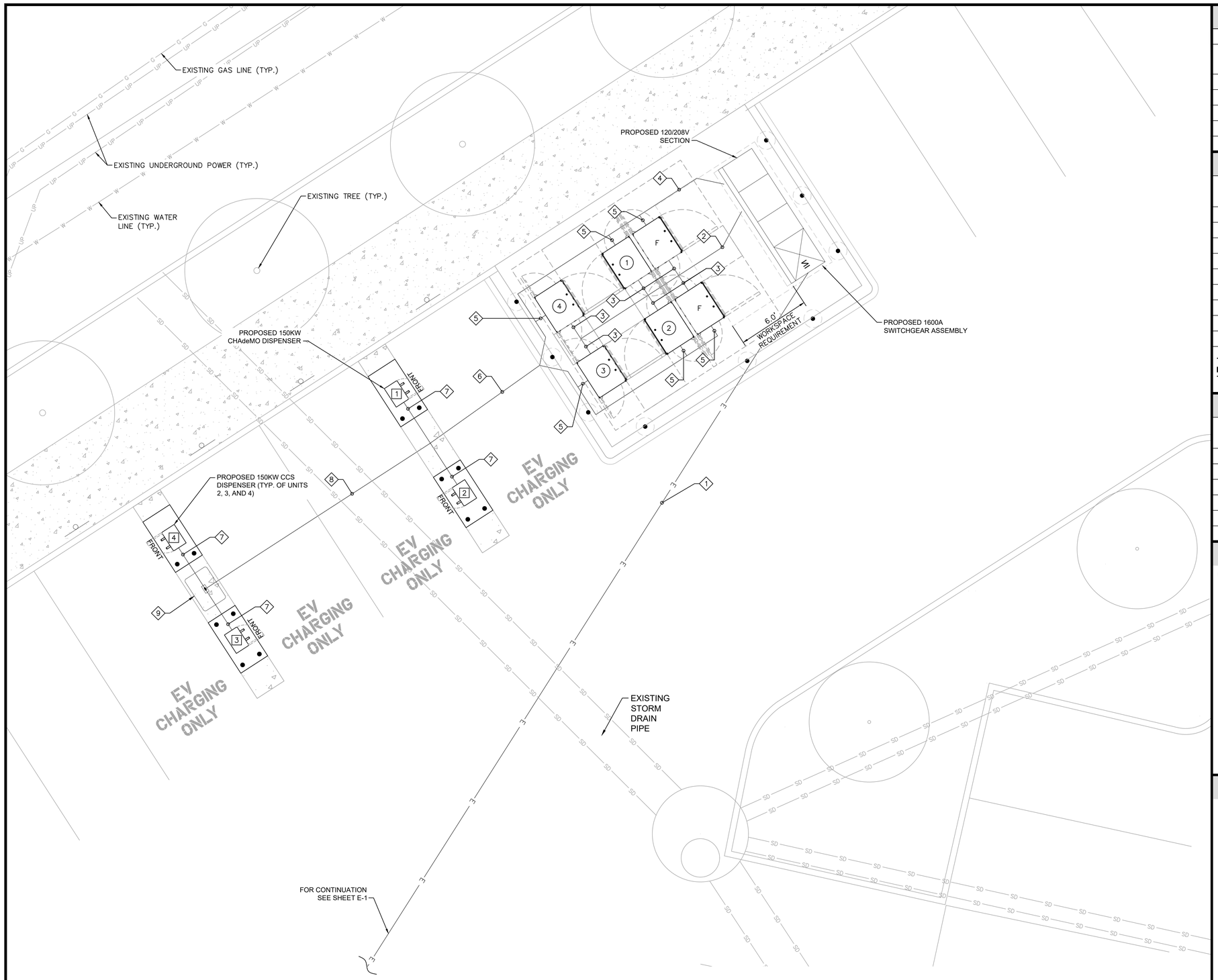

A
E-2

ELECTRICAL PLAN

PROPOSED DISPENSERS

CHARGE POST NUMBER	150KW	350KW	CABLE TYPE
1	X		CHAdeMO/CCS
2	X		CCS/CCS
3	X		CCS/CCS
4	X		CCS/CCS

POWER UNIT LENGTHS

POWER UNIT	LINEAR LENGTH SWBD TO POWER UNIT	** ESTIMATED LENGTH (FT)
1	13	29
2	13	29
3	19	35
4	19	35
FUTURE	7x2	46
TOTAL ESTIMATED LENGTH		128
TOTAL LENGTH OF WIRE		384

TOTAL LENGTH OF AC WIRE = SUM OF ESTIMATED LENGTH x 3 WIRES PER POWER UNIT
TOTAL LENGTH GND WIRE = SUM OF ESTIMATED LENGTHS

DC CHARGING POST LENGTHS

POWER UNITS	DISPENSER	LINEAR LENGTH (FT)	*** ESTIMATED LENGTH (FT)
1	1	32	54
2	2	32	54
3	3	43	65
4	4	43	65
FUTURE	FUTURE	50x2	144

NOTES

(SEE SHEET E-3 FOR WIRE CONFIGURATION)

** AC CONDUCTORS: 16 FEET IS ADDED TO HORIZONTAL RUN LENGTH TO ACCOUNT FOR BURIED DEPTH
*** DC CONDUCTORS: 22 FEET IS ADDED TO HORIZONTAL RUN LENGTH TO ACCOUNT FOR BURIED DEPTH

1. CONDUIT ROUTING IS DIAGRAMMATICALLY SHOWN ON PLANS AND ARE ONLY APPROXIMATIONS. THE EXACT LOCATION AND ROUTING PATHS SHALL BE FIELD VERIFIED AND INSTALLED PER JURISDICTIONAL REQUIREMENTS.
2. ALL ELECTRICAL WORK AND RELATED ACTIVITIES PERFORMED ONSITE SHALL BE DONE IN ACCORDANCE WITH NATIONAL ELECTRICAL CODE (NEC) STANDARDS BEING ENFORCED BY ALL APPLICABLE JURISDICTIONAL REQUIREMENTS AT TIME OF CONSTRUCTION.
3. UTILITY EQUIPMENT INSTALLATIONS AND PREP WORK SHALL BE COORDINATED WITH THE APPROPRIATE UTILITY ENGINEER TO ENSURE ACCURACY OF INSTALLATIONS.

KEYNOTES

1. SERVICE ENTRANCE CONDUITS, (5) 4" C. AND (1) 4" C. SPARE.
2. (6) 3" C
3. (1) 3" C
4. (6) 3/4" C.
5. (2) 2-1/2" C., (1) 1-1/2" C.
6. (12) 2-1/2" C., (6) 1-1/2" C., (6) 3/4" C.
7. (2) 2-1/2" C., (1) 1-1/2" C., (1) 3/4" C.
8. (8) 2-1/2" C., (4) 1-1/2" C., (4) 3/4" C.
9. CONTRACTOR SHALL INSTALL HANDHOLE, FLUSH WITH FINAL GRADE, FOR FUTURE STUB OUTS.

electrify america

ELECTRIFY AMERICA, LLC.
2003 EDMUND HALLEY DRIVE
SUITE 200
RESTON, VA 20191

Kimley»Horn
4582 S. ULSTER STREET
SUITE 1500
DENVER, CO 80237
303-288-2300

Job Name:
THE OUTLETS COLLECTION

1101 OUTLET COLLECTION WAY
AUBURN, WA 98001

SHEET DESCRIPTION:
ELECTRICAL PLAN

DUSTIN J. COMEAU
STATE OF WASHINGTON
54637
REGISTERED PROFESSIONAL ENGINEER

Project #: 210216
File: CONSTRUCTION DOCUMENTS
Drawn by: JWM
Date(s): 10/05/2019
11/26/2019 REV #1 CD90 PLANS
5/19/2020 REV #2 CD100 PLANS

E-2

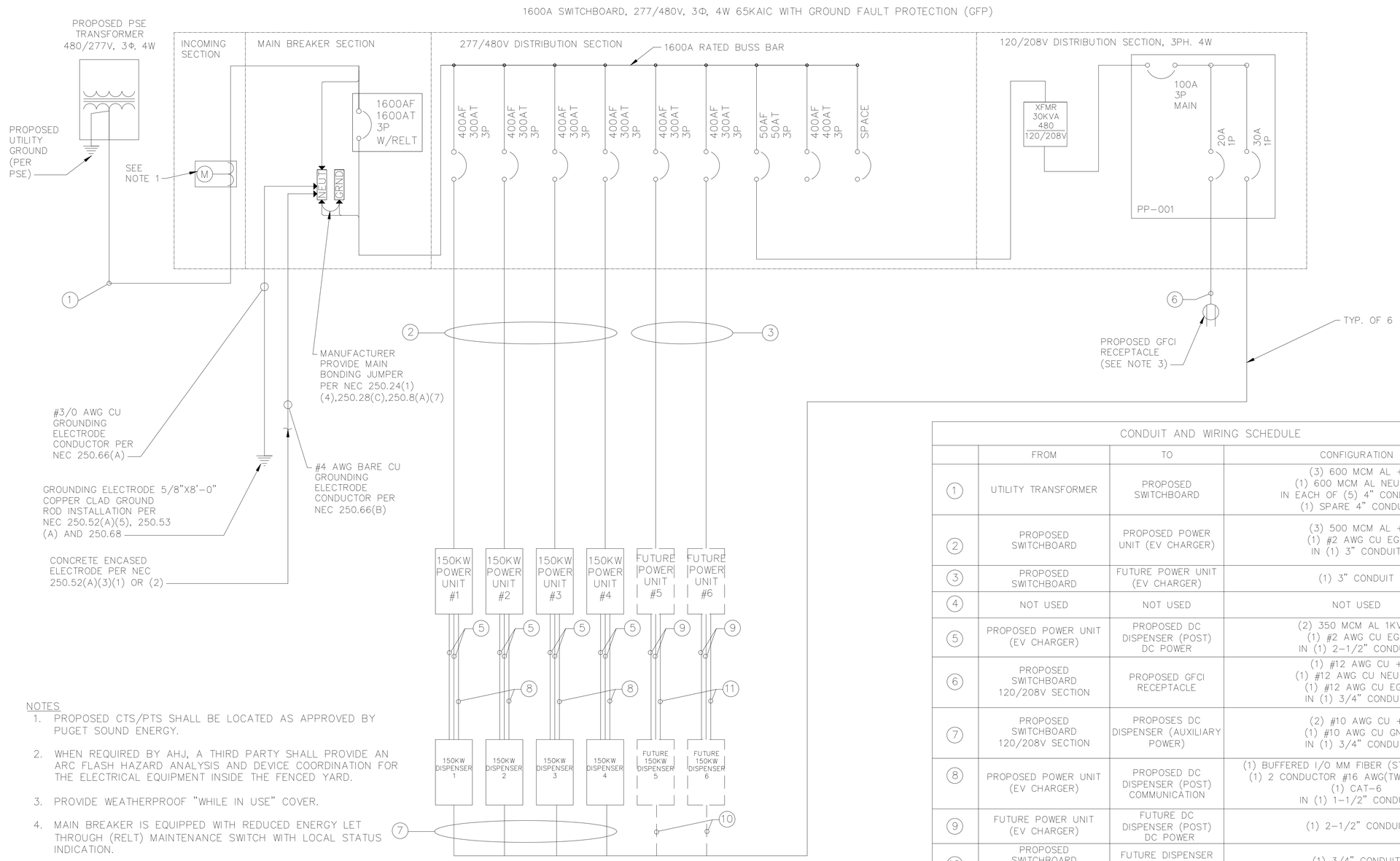

NOTES

1. PROPOSED CTS/PTS SHALL BE LOCATED AS APPROVED BY PUGET SOUND ENERGY.
2. WHEN REQUIRED BY AHJ, A THIRD PARTY SHALL PROVIDE AN ARC FLASH HAZARD ANALYSIS AND DEVICE COORDINATION FOR THE ELECTRICAL EQUIPMENT INSIDE THE FENCED YARD.
3. PROVIDE WEATHERPROOF "WHILE IN USE" COVER.
4. MAIN BREAKER IS EQUIPPED WITH REDUCED ENERGY LET THROUGH (RELT) MAINTENANCE SWITCH WITH LOCAL STATUS INDICATION.

LOAD SUMMARY			
	KVA	QTY	TOTAL KVA
150KW POWER UNIT	150 KVA	4	600
FUTURE 150KW	150 KVA	2	300
	25% CONTINUOUS DUTY		225
	30 KVA TRANSFORMER		30
	TOTAL		1,155
	AMPS (480V, 3-PH)		1,390A

CONDUIT AND WIRING SCHEDULE

	FROM	TO	CONFIGURATION
1	UTILITY TRANSFORMER	PROPOSED SWITCHBOARD	(3) 600 MCM AL + (1) 600 MCM AL NEUT + IN EACH OF (5) 4" CONDUIT + (1) SPARE 4" CONDUIT
2	PROPOSED SWITCHBOARD	PROPOSED POWER UNIT (EV CHARGER)	(3) 500 MCM AL + (1) #2 AWG CU EGC IN (1) 3" CONDUIT
3	PROPOSED SWITCHBOARD	FUTURE POWER UNIT (EV CHARGER)	(1) 3" CONDUIT
4	NOT USED	NOT USED	NOT USED
5	PROPOSED POWER UNIT (EV CHARGER)	PROPOSED DC DISPENSER (POST) DC POWER	(2) 350 MCM AL 1KV + (1) #2 AWG CU EGC IN (1) 2-1/2" CONDUIT
6	PROPOSED SWITCHBOARD 120/208V SECTION	PROPOSED GFCI RECEPTACLE	(1) #12 AWG CU + (1) #12 AWG CU NEUT + (1) #12 AWG CU EGC IN (1) 3/4" CONDUIT
7	PROPOSED SWITCHBOARD 120/208V SECTION	PROPOSES DC DISPENSER (AUXILIARY POWER)	(2) #10 AWG CU + (1) #10 AWG CU GND IN (1) 3/4" CONDUIT
8	PROPOSED POWER UNIT (EV CHARGER)	PROPOSED DC DISPENSER (POST) COMMUNICATION	(1) BUFFERED I/O MM FIBER (ST/ST CONN) + (1) 2 CONDUCTOR #16 AWG(TW/SH PAIR) + (1) CAT-6 IN (1) 1-1/2" CONDUIT
9	FUTURE POWER UNIT (EV CHARGER)	FUTURE DC DISPENSER (POST) DC POWER	(1) 2-1/2" CONDUIT
10	PROPOSED SWITCHBOARD 120/208 V SECTION	FUTURE DISPENSER (POST)	(1) 3/4" CONDUIT
11	FUTURE POWER UNIT (EV CHARGER)	FUTURE DC DISPENSER (POST) COMMUNICATION	(1) 1-1/2" CONDUIT

electrify america
ELECTRIFY AMERICA, LLC.
2003 EDMUND HALLEY DRIVE
SUITE 200
RESTON, VA 20191

Kimley»Horn
4582 S. ULSTER STREET
SUITE 1500
DENVER, CO 80237
303-288-2300

Job Name:
THE OUTLETS COLLECTION

1101 OUTLET COLLECTION WAY
AUBURN, WA 98001

SHEET DESCRIPTION:
SINGLE LINE DIAGRAM

DUSTIN J. COLLEDGE
STATE OF WASHINGTON
54637
REGISTERED PROFESSIONAL ENGINEER

Project #: 210216
File: CONSTRUCTION DOCUMENTS
Drawn by: JWM
Date(s): 10/05/2019
11/26/2019 REV #1 CD90 PLANS
5/19/2020 REV #2 CD100 PLANS

E-3

K:\DEN_CIVIL\096867000_ELECTRIFY AMERICA\WA210216 - OUTLETS COLLECTION (AUBURN, WA)\CADD\PLANSHEETS\CD50'S.DWG

NOTE

1. REBAR BONDED TOGETHER WITH STEEL TIE WIRES OR EXOTHERMIC WELDING

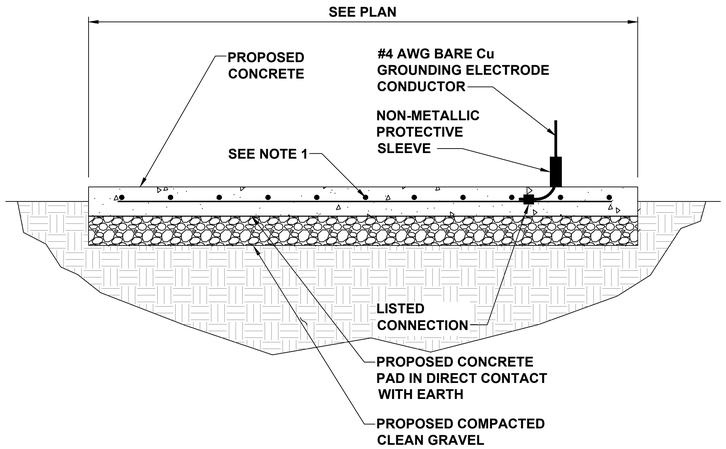

B / G-1 CONCRETE ENCASED ELECTRODE DETAIL

N.T.S.

CADWELD CONNECTIONS
OR ENGINEER APPROVED EQUAL

CABLE TO REBAR
TEE CONNECTION HORIZONTAL CABLE TAP TO VERTICAL REBAR
TYPE RJ

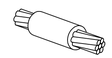

HORIZONTAL SPLICE
SPLICE OF HORIZONTAL CABLES
TYPE SS

PARALLEL HORIZONTAL CONDUCTORS
PARALLEL THROUGH CONNECTION OF HORIZONTAL CABLES
TYPE PT

HORIZONTAL STEEL SURFACE
TO FLAT STEEL SURFACE OR HORIZONTAL PIPE
TYPE HS

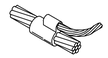

PARALLEL HORIZONTAL CONDUCTORS
PARALLEL DEAD END TAP OR HORIZONTAL THRU CONDUCTOR
TYPE PC

BURNDY CONNECTIONS
OR ENGINEER APPROVED EQUAL

BOND JUMPER
FIELD FABRICATED GREEN STRANDED INSULATED
TYPE 2-YA-2

VERTICAL PIPE
CABLE DOWN AT 45° TO RANGE OF VERTICAL PIPES
TYPE VS

VERTICAL STEEL SURFACE
CABLE DOWN AT 45° TO VERTICAL STEEL SURFACE INCLUDING PIPE
TYPE VS

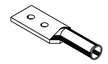

COPPER LUGS
TWO HOLE - LONG BARREL LENGTH
TYPE YA-2

HORIZONTAL TEE
TEE OF HORIZONTAL RUN AND TAP CABLES
TYPE TA

THROUGH CABLE TO GROUND ROD
THROUGH CABLE TO TOP OF GROUND ROD
TYPE GT

B / E-4 CADWELD CONNECTION DETAIL

N.T.S.

NOTES:

1. ALL HARDWARE SHALL BE STAINLESS STEEL 3/8" DIAMETER OR LARGER. ALL HARDWARE 18-8 STAINLESS STEEL INCLUDING LOCK WASHERS, COAT ALL SURFACES WITH AN ANTI-OXIDANT COMPOUND BEFORE MATING.
2. 2014 NEC 250.121 EXCEPTION: A WIRE-TYPE EQUIPMENT GROUNDING CONDUCTOR INSTALLED IN COMPLIANCE WITH 250.6(A) AND THE APPLICABLE REQUIREMENTS FOR BOTH THE EQUIPMENT GROUNDING CONDUCTOR AND THE GROUNDING ELECTRODE CONDUCTOR IN PARTS II, III, AND VI OF THIS ARTICLE SHALL BE PERMITTED TO SERVE AS BOTH AN EQUIPMENT GROUNDING CONDUCTOR AND A GROUNDING ELECTRODE CONDUCTOR.

C / E-4 GROUNDING NOTES

N.T.S.

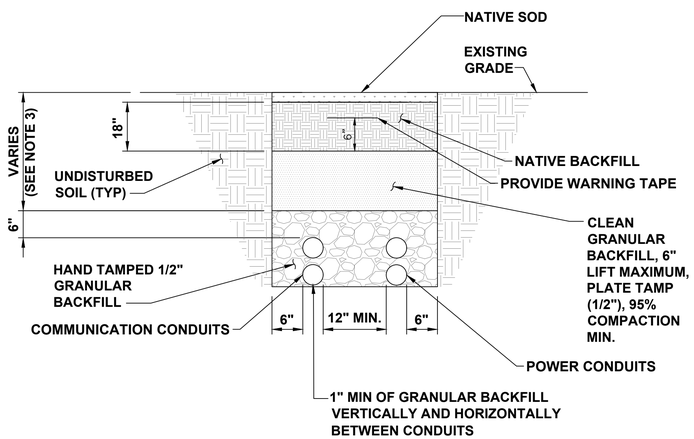

NOTES

1. ANY EXCAVATION LEFT OPEN NEEDS TO BE FENCED, BARRICADED, OR TRENCH PLATED TO INSURE THE SAFETY OF THE GENERAL PUBLIC.
2. ANY PAVEMENT DAMAGE DURING CONSTRUCTION SHALL BE REPAIRED OR REPLACED BY THE CONTRACTOR TO PRE CONSTRUCTION CONDITIONS OR BETTER.
3. TRENCH DEPTHS ARE REQUIRED TO BE 2'-0" MIN. OR 6" BELOW FROST LINE PER LOCAL JURISDICTION REQUIREMENTS.
4. EXACT NUMBER OF CONDUITS SHALL BE DETERMINED BY SHEET E-1 & E-2, EXACT CONDUIT PLACEMENT IN TRENCH SHALL BE DETERMINED BY THE CONTRACTOR IN THE FIELD BASED ON PHYSICAL MEASUREMENTS AND JURISDICTIONAL REQUIREMENTS.

TYPICAL NON-UTILITY CONDUIT UNDER SOIL TRENCH

D / E-4 N.T.S.

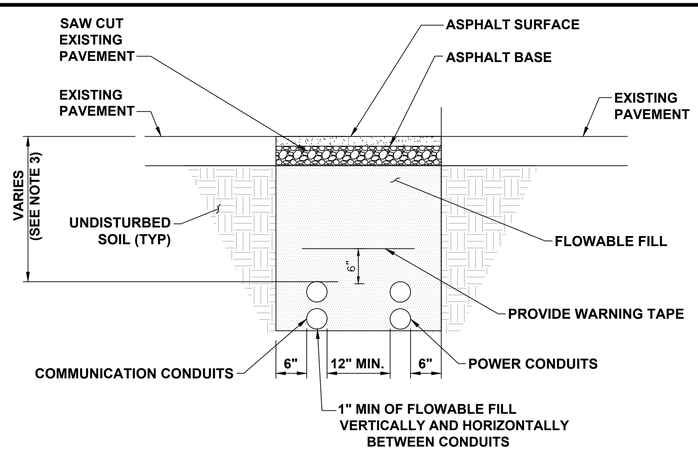

NOTES

1. ASPHALT SHALL COMPLY WITH STANDARD DOT OR LOCAL JURISDICTION SPEC. FOR HMA SURFACE COURSE.
2. ANY EXCAVATION LEFT OPEN NEEDS TO BE FENCED, BARRICADED, OR TRENCH PLATED TO INSURE THE SAFETY OF THE GENERAL PUBLIC.
3. TRENCH DEPTHS ARE REQUIRED TO BE 2'-0" MIN. OR 6" BELOW FROST LINE PER LOCAL JURISDICTION REQUIREMENTS.
4. ANY PAVEMENT DAMAGE DURING CONSTRUCTION SHALL BE REPAIRED OR REPLACED BY THE CONTRACTOR TO PRE CONSTRUCTION CONDITIONS OR BETTER.
5. EXACT NUMBER OF CONDUITS SHALL BE DETERMINED BY SHEET E-1 & E-2, EXACT CONDUIT PLACEMENT IN TRENCH SHALL BE DETERMINED BY THE CONTRACTOR IN THE FIELD BASED ON PHYSICAL MEASUREMENTS AND JURISDICTIONAL REQUIREMENTS.

TYPICAL NON-UTILITY CONDUIT UNDER ASPHALT TRENCH

E / E-4 N.T.S.

electrify america

ELECTRIFY AMERICA, LLC.
2003 EDMUND HALLEY DRIVE
SUITE 200
RESTON, VA 20191

Kimley»Horn

4582 S. ULSTER STREET
SUITE 1500
DENVER, CO 80237
303-288-2300

Job Name:

THE OUTLETS COLLECTION

1101 OUTLET COLLECTION WAY
AUBURN, WA 98001

SHEET DESCRIPTION:
ELECTRICAL DETAILS

Project #: 210216
File: CONSTRUCTION DOCUMENTS
Drawn by: JWM
Date(s): 10/05/2019
11/26/2019 REV #1 CD90 PLANS
5/19/2020 REV #2 CD100 PLANS

E-4

ACCESS TO: Front Only	PHASE: 3P4W	PUGET SOUND ENERGY, WA
CLASS: 2	AMPERE: 1600A	CODE: PN PT COMPT
LABEL: UL SE	BUS MTL: Al 750A/in²	UTILITY PER EUSERC PG. 322, 330
VOLTAGE: 480/277V	PLATE: Tin Plate	METER PER EUSERC PG. 332, 326
STYLE: Bolt-On	RATING: Fully Rated	UGPS PER PG 345
BUS BRACING (RMS SYM):	65000A	LUG LANDING PER 347
DEV MIN.INT.RATING (RMS SYM):	65000A	

Switchboard / Device Information

Circuit No.	Device	Amps	Poles	Nameplates	Lugs/Cable Size	Notes
Main	SS	1600	3			14,15,16,18,19,21,22,23, 24,26,27
1	SELA	15	2		(1) - #12 - 3/0 AWG CU - Mech. AL	22
2	SGLA4	300	3		(2) - 300 - 500 MCM CU - Mech. AL	22
3	SGLA4	300	3		(2) - 300 - 500 MCM CU - Mech. AL	22
4	SGLA4	300	3		(2) - 300 - 500 MCM CU - Mech. AL	22
5	SGLC4	350	3		(2) - 300 - 500 MCM CU - Mech. AL	17,18,20,22,24,25
6	SGLA4	400	3	(SPACE AND BUS)	(2) - 2/0 - 250 MCM CU - Mech. AL	30
7	SGLA4	300	3		(2) - 300 - 500 MCM CU - Mech. AL	22
8	SGLA4	300	3		(2) - 300 - 500 MCM CU - Mech. AL	22
9	SELA	50	3		(1) - #12 - 3/0 AWG CU - Mech. AL	22
10	SELA	15	3		(1) - #12 - 3/0 AWG CU - Mech. AL	22
LP1	AQ	100	3			12,13
T1	XFMR					11,12,28,29,31,32

NOTES:
1. Switchboard furnished with a rainproof TYPE 3R (non-walk-in) enclosure.
   NOTE: See plan view for details.Need additonal 1 inch space clearance on top and 1.5 inch clearance on the rear of the swbd.
2. Equipment ground bus furnished with lugs.
3. Switchboard qualified for Seismic Ratings per publication DET-463 and OSP-0044-10.
4. Switchboard furnished with section space heaters.
5. Switchboard furnished with thermostat control for section space heaters.
6. Switchboard furnished with lightning arrestor.
7. Switchboard furnished with fully rated panel.
8. EUSERC utility section(s) furnished with handles and sealing provisions per EUSERC specifications.
9. INSTALLATION NOTE: Caution: If switchboard is installed on a housekeeping slab greater than 2-1/2" the meter may be over the 6'3" maximum allowable meter height. Consult Utility if you need more informaton.
10. Shipping splits as indicated, ship sections separated and joined as indicated.
11. Transformer specified. Refer to BOM for details.
12. Switchboard furnished with Factory Interconnecting Cables per the Wire and Cable Schedule drawings.
13. Lighting Panel specified. Refer to BOM and Drawings for details.
14. Device is 100 percent rated.
15. Device furnished with 120V electric operator.
16. Device furnished with ETU (LSIGM) programmer.
17. Device furnished with MET (LSIGM) programmer.
18. Device is furnished with integral ground fault protection.
19. Device is furnished with RELT (Reduced Energy Let Through).
20. 4 wire GROUND FAULT Load.
21. Device furnished with 4 240V AC/125-250 DC auxiliary switches (SPDT).
22. Device furnished with padlocking provisions.
23. Device furnished with 120V AC Remote Close Solenoid.
24. Device furnished with 120V AC undervoltage release.
25. Device furnished with 1 Gold-Plated 30VDC auxiliary switches (SPDT).
26. Device furnished with 120V AC/125V DC shunt trip.
27. Device requires RELT or ZSI feature if Authority having jurisdiction has adopted NEC 2014 code requirements.
28. Transformer Primary is provided with factory interconnection cables, see Wire and Cable schedule.

PROJECT NAME : Electrify America Cycle 2 RFQ CUSTOMER: ELECTRIFY AMERICA, LLC, RESTON	DWG TITLE: Device Information	CREATED BY: Snider, Toni CHECKED BY: APPROVED BY: DATE: 4/5/2019 8:53:54 PM REVISION NO.: 34	PRODUCT NAME: *Spectra Series* ™ *Switchboard*	DRAWING NO: ITEM NO: 40 MARKS: PUGET SOUND 1600A QUOTE NO: U72-00015645 SHEET: 1 of 5

W2 Date:10/7/2019 8:56:20 PM BAB75305-17B5-452B-A352-DEE37AADE91C

ACCESS TO: Front Only	PHASE: 3P4W	PUGET SOUND ENERGY, WA
CLASS: 2	AMPERE: 1600A	CODE: PN PT COMPT
LABEL: UL SE	BUS MTL: Al 750A/in²	UTILITY PER EUSERC PG. 322, 330
VOLTAGE: 480/277V	PLATE: Tin Plate	METER PER EUSERC PG. 332, 326
STYLE: Bolt-On	RATING: Fully Rated	UGPS PER PG 345
BUS BRACING (RMS SYM):	65000A	LUG LANDING PER 347
DEV MIN.INT.RATING (RMS SYM):	65000A	

Switchboard / Device Information

NOTES: (continued)
29. Transformer Secondary is proviced with factory interconnection cables, see Wire and Cable schedule.
30. Lugs not furnished with SPACE AND BUS.
31. The Primary Transformer is protected by 50 Amp Breaker
32. The Secondary Transformer is protected by 100 Amp Breaker
33. Estimated total factory connected wiring points for the lineup 88.
34. Estimated shipping weight for the lineup is 3024 lbs.
35. Miscellaneous Add-Ons:
1 MOXA MB5105-MB-EIP
1 MOXA IOLOGIK E1214
2 RL4 RELAY
1 MOXA MB3270
1 SOLA POWER SUPPLY
36. Due to the presence of Miscellaneous Add-Ons, please review drawings with the factory to ensure accuracy.
37. Drawing Notes:
NEMA 3R to have rearward sloping roof
SGLC feeder breaker to be at end of bus
No horizontal bus in ISB section
Transformer to panel to be wired in plant.
ISB transformer wired to main breaker in panel in factory
38. As a result of Drawing Notes, this product may require modification to reflect correct footprint, price, cycle or UL certification.

PROJECT NAME : Electrify America Cycle 2 RFQ CUSTOMER: ELECTRIFY AMERICA, LLC, RESTON	DWG TITLE: Device Information	CREATED BY: Snider, Toni CHECKED BY: APPROVED BY: DATE: 4/5/2019 8:53:54 PM REVISION NO.: 34	PRODUCT NAME: *Spectra Series* ™ *Switchboard*	DRAWING NO: ITEM NO: 40 MARKS: PUGET SOUND 1600A QUOTE NO: U72-00015645 SHEET: 2 of 5

W2 Date:10/7/2019 8:56:20 PM BAB75305-17B5-452B-A352-DEE37AADE91C

ACCESS TO: Front Only	PHASE: 3P4W	PUGET SOUND ENERGY, WA
CLASS: 2	AMPERE: 1600A	CODE: PN PT COMPT
LABEL: UL SE	BUS MTL: Al 750A/in²	UTILITY PER EUSERC PG. 322, 330
VOLTAGE: 480/277V	PLATE: Tin Plate	METER PER EUSERC PG. 332, 326
STYLE: Bolt-On	RATING: Fully Rated	UGPS PER PG 345
BUS BRACING (RMS SYM):	65000A	LUG LANDING PER 347
DEV MIN.INT.RATING (RMS SYM):	65000A	

WIRING AND CABLE SCHEDULE
CABLE SIZE BASED ON 75C COPPER CABLE

TRANSFORMER CABLE SCHEDULE

CATALOG NO.	DESIGNATION	XFMR NAME PLATE	PHASE	KVA	TEMP RISE	MATERIAL	FREQ.	PRIMARY/ SECONDARY	VOLTS	AMPS	PHASE WIRE SIZE	NEUTRAL WIRE SIZE	GROUND WIRE SIZE	BONDING	DEVICE ORIGIN (CABLED FROM)	DEVICE DESTINATION (CABLED TO)
IIT10B1302	T1		3 Phase	30	150	Aluminum	60 Hz	PRIMARY	480	50	(1)#8	(1)#8	(1)#10		Field Wired	
								SECONDARY	208Y/120	100	(1)#3	(1)#3	(1)#8	(1)#6		Factry wire to panel

PANEL CABLE SCHEDULE

DESIGNATION	PANEL NAME PLATE	AMPS	VOLTAGE	INCOMING TYPE	PHASE WIRE SIZE	NEUTRAL WIRE SIZE	GROUND WIRE SIZE	DEVICE ORIGIN (CABLED FROM)
LP1		100 Amps	208	Breaker	(1)#3	(1)#3	(1)#8	T1

No lighting panel branch circuits will have a NEUT, GND or Bonding wire.
Any circuit that has a XRFM device orgin will have a NEUT, GRD and Bonding Jumper.
All XRFM Bonding Jumper will be sized the same as GND.
Any Main circuit that has 3 phase 4 wire service will have a NEUT and GND.
Neutral Splice required to adjacent Power Panel of like voltages only.

PROJECT NAME : Electrify America Cycle 2 RFQ CUSTOMER: ELECTRIFY AMERICA, LLC, RESTON	DWG TITLE:	CREATED BY: Snider, Toni CHECKED BY: APPROVED BY: DATE: 4/5/2019 8:53:54 PM REVISION NO.: 34	PRODUCT NAME: *Spectra Series* ™ *Switchboard*	DRAWING NO: ITEM NO: 40 MARKS: PUGET SOUND 1600A QUOTE NO: U72-00015645 SHEET: 0 of 5

W2 Date:10/7/2019 8:56:20 PM BAB75305-17B5-452B-A352-DEE37AADE91C

ACCESS TO: Front Only	PHASE: 3P4W	PUGET SOUND ENERGY, WA
CLASS: 2	AMPERE: 1600A	CODE: PN PT COMPT
LABEL: UL SE	BUS MTL: Al 750A/in²	UTILITY PER EUSERC PG. 322, 330
VOLTAGE: 480/277V	PLATE: Tin Plate	METER PER EUSERC PG. 332, 326
STYLE: Bolt-On	RATING: Fully Rated	UGPS PER PG 345
BUS BRACING (RMS SYM):	65000A	LUG LANDING PER 347
DEV MIN.INT.RATING (RMS SYM):	65000A	

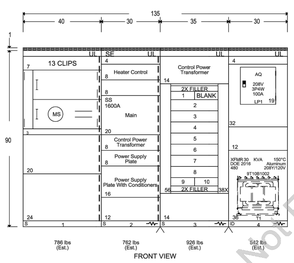

FRONT VIEW

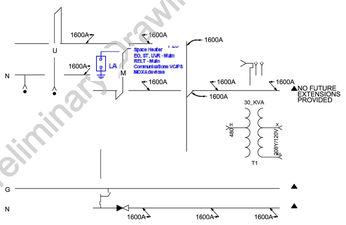

BUSSING DIAGRAM

● (4) LUGS PROVIDED PER PHASE & NEUTRAL PER POWER COMPANY SPECIFICATIONS

PROJECT NAME : Electrify America Cycle 2 RFQ CUSTOMER: ELECTRIFY AMERICA, LLC, RESTON	DWG TITLE: Front View/ Bussing	CREATED BY: Snider, Toni CHECKED BY: APPROVED BY: DATE: 4/5/2019 8:53:54 PM REVISION NO.: 34	PRODUCT NAME: *Spectra Series* ™ *Switchboard*	DRAWING NO: ITEM NO: 40 MARKS: PUGET SOUND 1600A QUOTE NO: U72-00015645 SHEET: 4 of 5

W2 Date:10/7/2019 8:56:20 PM BAB75305-17B5-452B-A352-DEE37AADE91C

ACCESS TO: Front Only	PHASE: 3P4W	PUGET SOUND ENERGY, WA
CLASS: 2	AMPERE: 1600A	CODE: PN PT COMPT
LABEL: UL SE	BUS MTL: Al 750A/in²	UTILITY PER EUSERC PG. 322, 330
VOLTAGE: 480/277V	PLATE: Tin Plate	METER PER EUSERC PG. 332, 326
STYLE: Bolt-On	RATING: Fully Rated	UGPS PER PG 345
BUS BRACING (RMS SYM):	65000A	LUG LANDING PER 347
DEV MIN.INT.RATING (RMS SYM):	65000A	

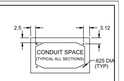

Top Conduit Area

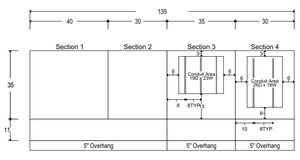

Front Plan View

Bottom Conduit Area

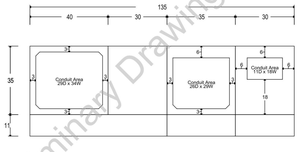

Front Plan View

PROJECT NAME : Electrify America Cycle 2 RFQ CUSTOMER: ELECTRIFY AMERICA, LLC, RESTON	DWG TITLE: Conduit View	CREATED BY: Snider, Toni CHECKED BY: APPROVED BY: DATE: 4/5/2019 8:53:54 PM REVISION NO.: 34	PRODUCT NAME: *Spectra Series* ™ *Switchboard*	DRAWING NO: ITEM NO: 40 MARKS: PUGET SOUND 1600A QUOTE NO: U72-00015645 SHEET: 5 of 5

W2 Date:10/7/2019 8:56:19 PM BAB75305-17B5-452B-A352-DEE37AADE91C

PANEL MARKS:

TECHNICAL SPECIFICATIONS

PANEL TYPE:	AQ PANELBOARD
QUANTITY:	1
AMPS:	125A
VOLTAGE:	208Y/120V
SYSTEM:	3P4W
KAIC:	10 KAIC SC FULLY RATED
MATERIAL:	ALUMINUM BUS
ENCLOSURE:	NEMA 1 ENCLOSURE
MOUNTING:	SURFACE
SECTION:	1

MAIN DISCONNECT DEVICE

FEED DIR.	Top
TYPE:	Breaker
AMPS:	100
CATALOG NO.:	THQB32100
POLES:	3
LUGS:	1-lug/phase 1-cable/lug #14 -1/0

OPTIONS INCLUDED

QTY	DESCRIPTION
1	Aluminum Bus Heat Rated
2	Ground-Box bonded TGL2
1	Ground main lug TGL20
1	Equipment Panel
1	Interior Only

BRANCH DEVICES

QTY	AMPS/POLES	DESCRIPTION
6	20A /1P	THQB1120
1	40A /2P	THQB2140
3	20A /1P	Space THQB1120
6	30A /1P	THQB1130
1	15A /1P	THQB1115

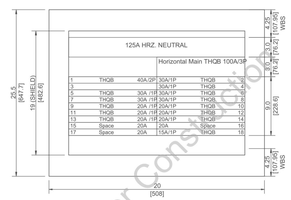

PANEL INFORMATION	
INTERIOR	AQM3181AY
INTERIOR	
BOX	No Box Supplied
FRONT	No Front Supplied
TROUGH	
TROUGH END	
PULL BOX	
DIMENSIONS	19"X20"X5.75"

1. WBS - WIRE BENDING SPACE.
2. DRAWING NOT TO SCALE
3. DIMENSIONS ARE IN INCHES[mm]

PROJECT NAME : Electrify America C-yde 2 RFQ CUSTOMER: ELECTRIFY AMERICA, - LLC, RESTON	PANEL ID: AQ Panelboard	CREATED BY: Snider, Toni CHECKED BY: APPROVED BY: DATE: 4/5/2019 8:53:54 PM REVISION NO: 1NN000005pqQAC	PRODUCT NAME: *A-SERIES PANELBOARD*	DRAWING NO: ITEM NO: LP1 MARKS: QUOTE NO: U72-00015645 SHEET:

EA-LP-009

FOR REFERENCE ONLY

electrify america

ELECTRIFY AMERICA, LLC.
2003 EDMUND HALLEY DRIVE
SUITE 200
RESTON, VA 20191

Kimley»Horn

4582 S. ULSTER STREET
SUITE 1500
DENVER, CO 80237
303-288-2300

Job Name:

THE OUTLETS COLLECTION

1101 OUTLET COLLECTION WAY
AUBURN, WA 98001

SHEET DESCRIPTION:
ELECTRICAL DETAILS

Project #: 210216
File: CONSTRUCTION DOCUMENTS
Drawn by: JWM
Date(s): 10/05/2019
11/26/2019 REV #1 CD90 PLANS
5/19/2020 REV #2 CD100 PLANS

E-5

Preliminary Drawings - Not For Construction

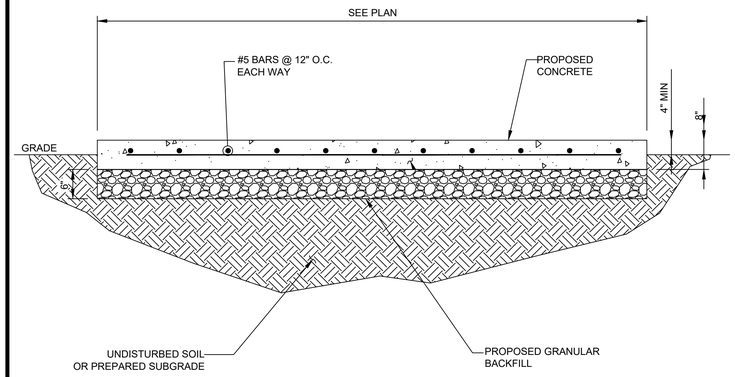

A / D-1 CONCRETE PAD DETAIL

SCALE: N.T.S.

NOTES

1. OPERABLE PARTS OF DISPENSER SHALL NOT EXCEED 48" ABOVE PARKING SURFACE.
2. BOLLARDS ARE FOR WARNING PURPOSE ONLY.

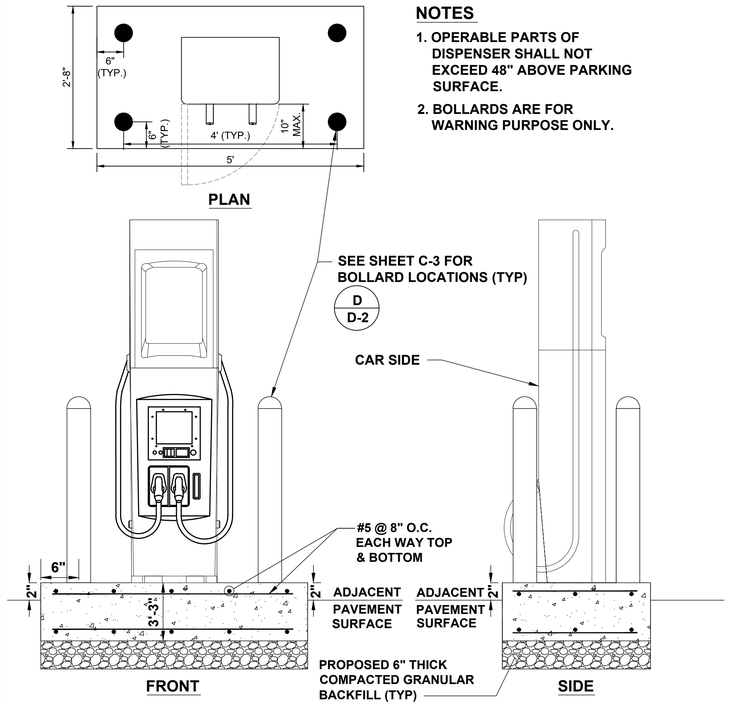

B / D-1 BTC DISPENSER FOOTING DETAIL

SCALE: N.T.S.

NOTE

1. MINIMUM CONCRETE EDGE DISTANCE FOR PROPOSED ANCHORS SHALL BE 6".
2. CONTRACTOR TO FIELD VERIFY THE ANCHOR SPACING PER MANUFACTURER'S INSTALLATION MANUAL.
3. THE DETAIL DEPICTS TYPICAL MANUFACTURER EQUIPMENT ANCHORING AND DIMENSIONS, REFER TO MANUFACTURER INSTALLATION AND USER'S MANUAL FOR ANCHORING AND INSTALLATION RECOMMENDATIONS AND PROCEDURES.

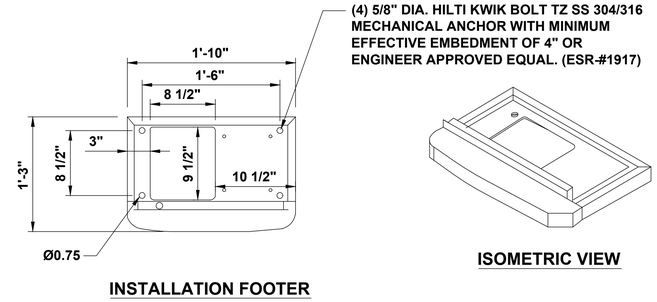

C / D-1 BTC DISPENSER ANCHORAGE AND CONDUIT ENTRY DETAIL

SCALE: N.T.S.

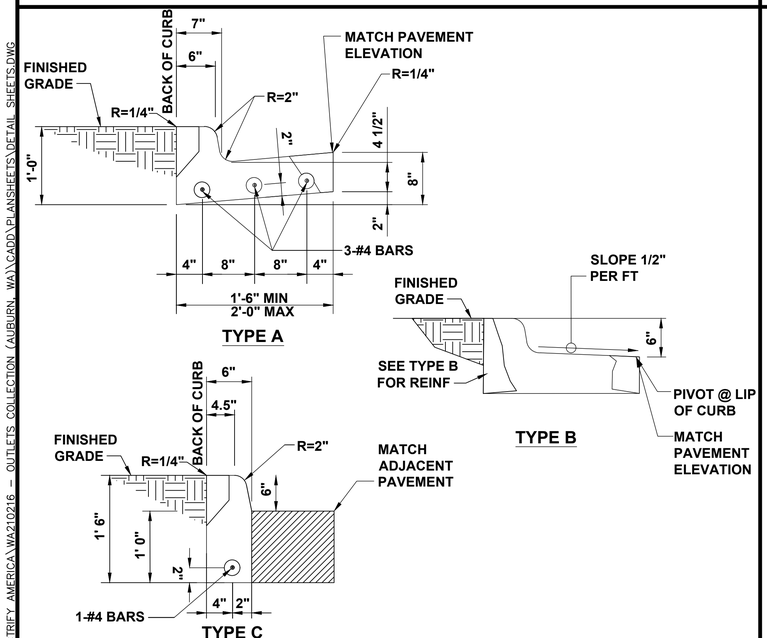

NOTE

1. 1/2" PRE MOLDED EXPANSION JOINTS SHALL BE PLACED AT POINTS OF CURVATURE, CURB RETURNS, CURB INLETS, AND AT 250' CENTERS. CONTRACTION JOINTS SHALL BE 2" DEEP, 3/16" WIDE, AND PLACED AT 15' INTERVALS EQUALLY SPACED BETWEEN EXPANSION JOINTS.

D / D-1 CONCRETE CURB DETAIL

SCALE: N.T.S.

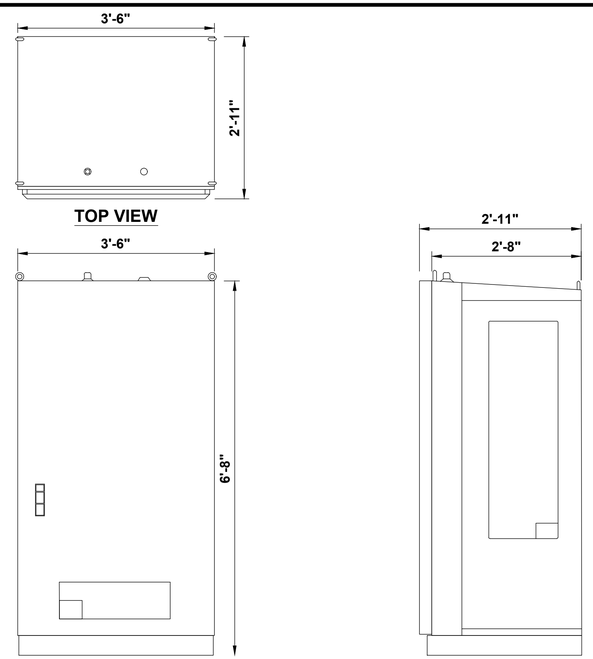

E / D-1 BTC POWER UNIT DETAIL

SCALE: N.T.S.

NOTES

1. MINIMUM CONCRETE EDGE DISTANCE FOR PROPOSED ANCHORS SHALL BE 6".
2. ALL DIMENSIONS ARE IN INCHES.
3. THE DETAIL DEPICTS TYPICAL MANUFACTURER EQUIPMENT ANCHORING AND DIMENSIONS, REFER TO MANUFACTURER INSTALLATION AND USER'S MANUAL FOR ANCHORING AND INSTALLATION RECOMMENDATIONS AND PROCEDURES.

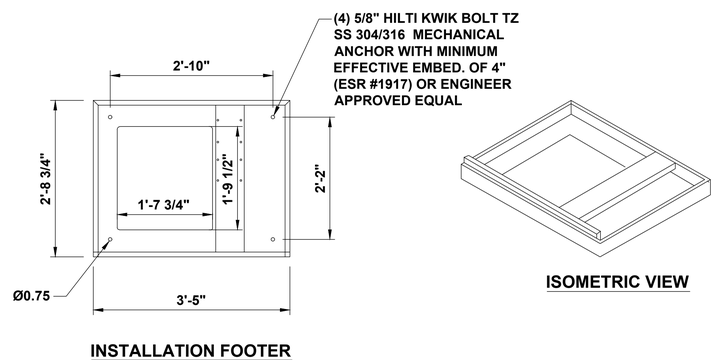

F / D-1 BTC POWER UNIT ANCHORAGE AND CONDUIT ENTRY DETAIL

SCALE: N.T.S.

electrify america

ELECTRIFY AMERICA, LLC.
2003 EDMUND HALLEY DRIVE
SUITE 200
RESTON, VA 20191

Kimley»Horn

4582 S. ULSTER STREET
SUITE 1500
DENVER, CO 80237
303-288-2300

Job Name:

THE OUTLETS COLLECTION

1101 OUTLET COLLECTION WAY
AUBURN, WA 98001

SHEET DESCRIPTION:
DETAILS

KYLE WATSON
STATE OF WASHINGTON
REGISTERED
PROFESSIONAL ENGINEER

Project #: 210216
File: CONSTRUCTION DOCUMENTS
Drawn by: JWM
Date(s): 10/05/2019
11/26/2019 REV #1 CD90 PLANS
5/19/2020 REV #2 CD100 PLANS

D-1

K:\DEN_CIVIL\096867000_ELECTRIFY AMERICA\WA210216 - OUTLETS COLLECTION (AUBURN, WA)\CADD\PLANSHEETS\DETAIL SHEETS.DWG

NOTES

1. SEE FLOOR PLAN IN REFERENCED SWITCHBOARD ASSEMBLY DRAWINGS FOR MOUNTING HOLE LOCATION AND SWITCHBOARD BAY DIMENSIONS.
2. SEE ELEVATION IN REFERENCED SWITCHBOARD ASSEMBLY DRAWINGS FOR BASE CHANNEL DIMENSION.
3. MINIMUM 10 1/2" CONCRETE EDGE DISTANCE REQUIRED FOR PROPOSED ANCHORAGE.
4. CONTRACTOR TO MOUNT THE KEYSAFE BOX ON THE SWITCHGEAR WHEN THERE IS NO FENCE

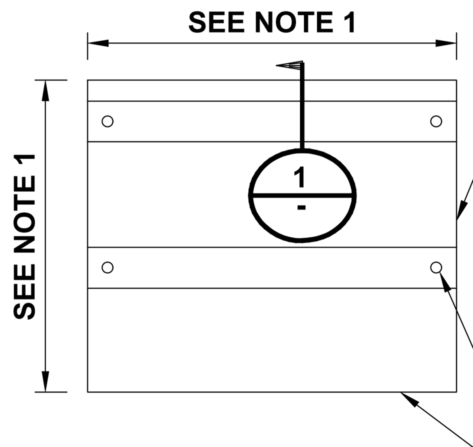

BOTTOM VIEW

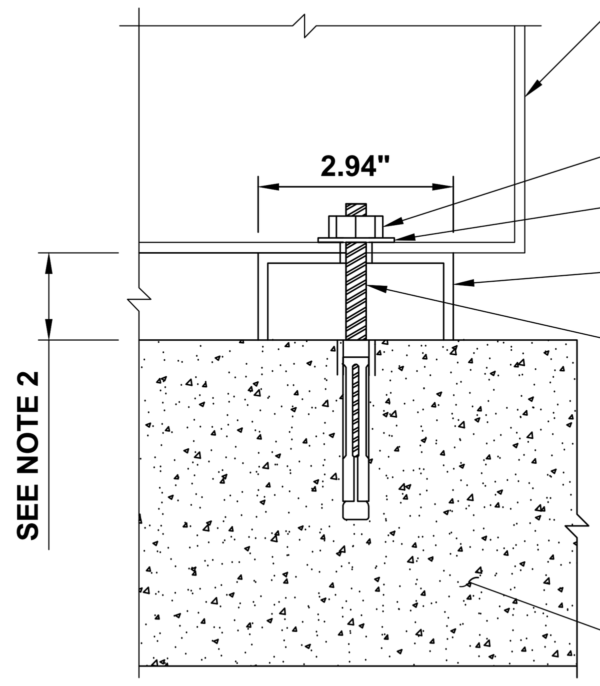

SECTION 1

(A / D-2) SWITCHBOARD MOUNTING DETAIL

SCALE: N.T.S.

NOTES

1. BOLLARD IS FOR WARNING PURPOSES ONLY.
2. BOLLARD DETAIL FOR BOLLARDS AROUND ELECTRIFY AMERICA EQUIPMENT.
3. CONTRACTOR TO PROVIDE (2) 6' LONG, 1/2" THICK FOAM STRIPS CROSSED OVER TOP OF STEEL PIPE TO STABILIZE SLIP COVER.

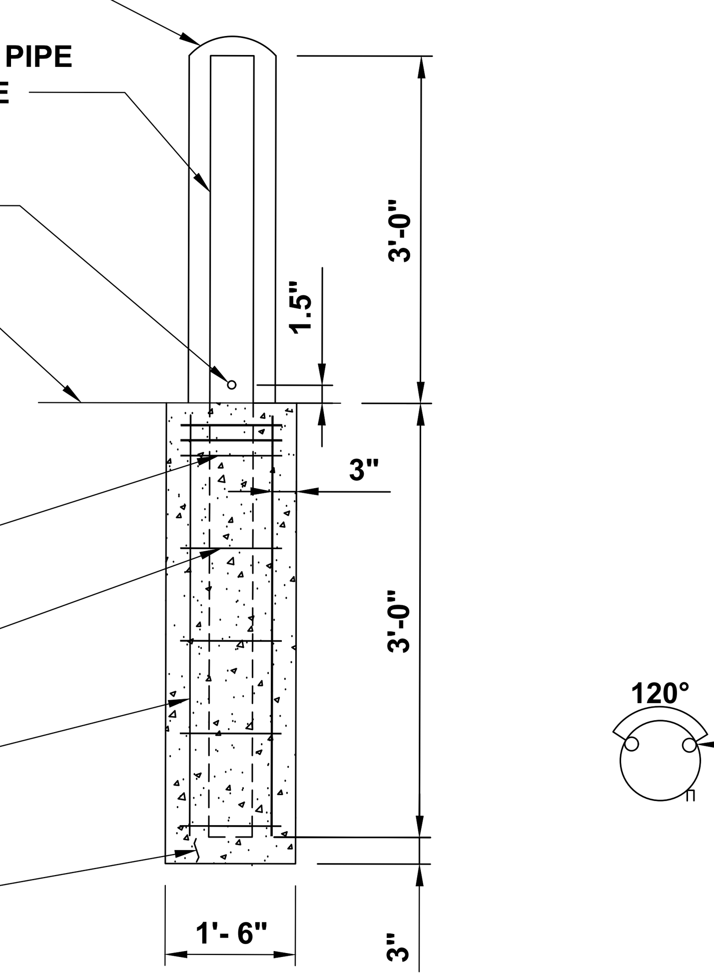

(B / D-2) WARNING BOLLARD DETAIL

SCALE: N.T.S.

(C / D-2) NOT USED

SCALE: N.T.S.

NOTES

1. BOLLARD IS FOR WARNING PURPOSES ONLY.
2. BOLLARD DETAIL FOR BOLLARDS AROUND ELECTRIFY AMERICA EQUIPMENT.
3. CONTRACTOR TO PROVIDE (2) 6' LONG, 1/2" THICK FOAM STRIPS CROSSED OVER TOP OF STEEL PIPE TO STABILIZE SLIP COVER.

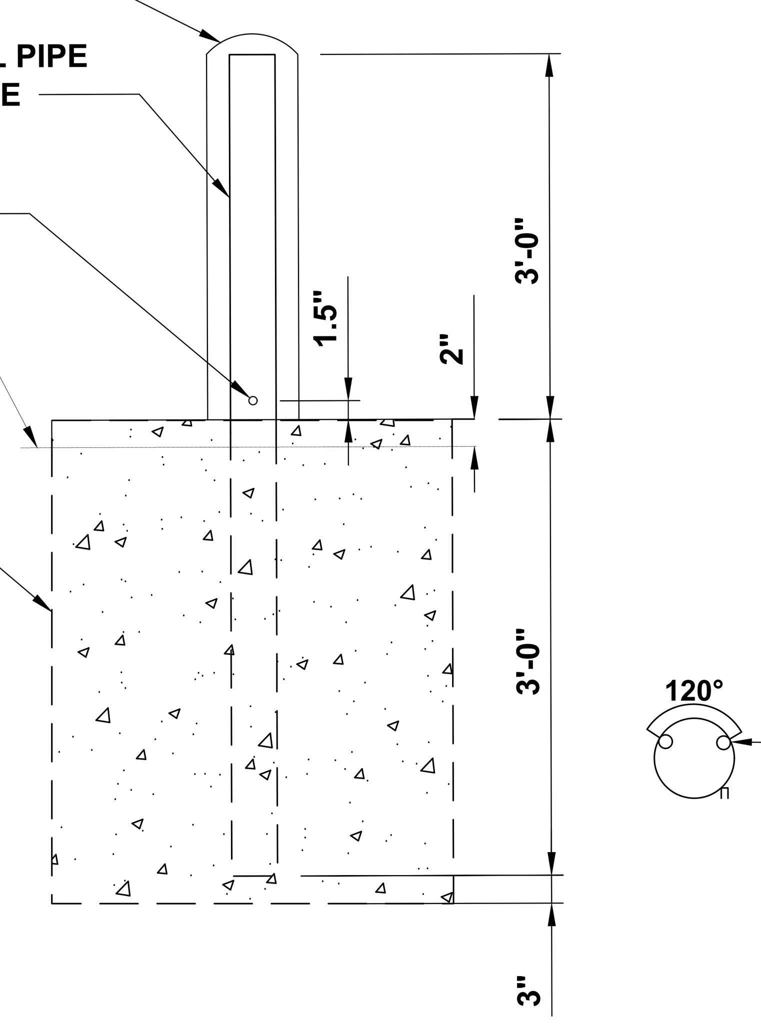

(D / D-2) DISPENSER WARNING BOLLARD DETAIL

SCALE: NTS

(E / D-2) NOT USED

SCALE: NTS

NOTES

1. BOTTOM OF LOWEST SIGN SHALL BE INSTALLED 66" ABOVE GRADE.
2. TO CONFORM WITH MUTCD SIGNS R-113, R-111-L AND R-111-R.
3. SIGNS ARE TO HAVE A WHITE RETROREFLECTIVE BACKGROUND WITH RED RETROREFLECTIVE LETTERS, ARROW, AND BORDER

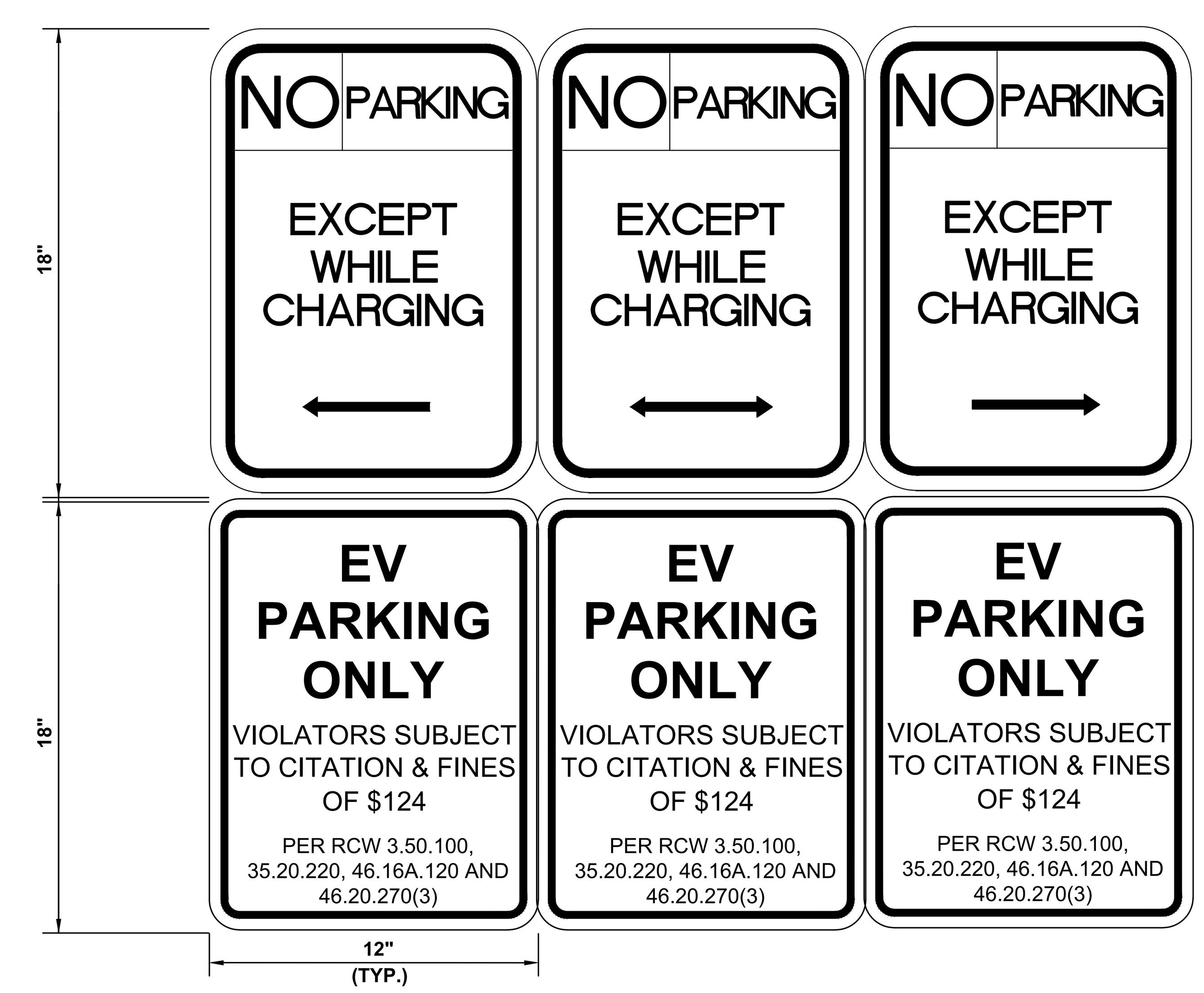

(F / D-2) NO PARKING SIGN

SCALE:

electrify america

ELECTRIFY AMERICA, LLC.
2003 EDMUND HALLEY DRIVE
SUITE 200
RESTON, VA 20191

Kimley»Horn

4582 S. ULSTER STREET
SUITE 1500
DENVER, CO 80237
303-288-2300

Job Name:
THE OUTLETS COLLECTION

1101 OUTLET COLLECTION WAY
AUBURN, WA 98001

SHEET DESCRIPTION:
DETAILS

KYLE WATSON
STATE OF WASHINGTON
REGISTERED PROFESSIONAL ENGINEER

Project #: 210216
File: CONSTRUCTION DOCUMENTS
Drawn by: JWM
Date(s): 10/05/2019
11/26/2019 REV #1 CD90 PLANS
5/19/2020 REV #2 CD100 PLANS

D-2

K:\DEN_CIVIL\096867000_ELECTRIFY_AMERICA\WA210216 – OUTLETS_COLLECTION_(AUBURN,_WA)\CADD\PLANSHEETS\DETAIL_SHEETS.DWG

A D-3 **NOT USED**
SCALE: N.T.S.

B D-3 **NOT USED**
SCALE: N.T.S.

STANDALONE CUSTOMER PROVIDED TUV INSTRUMENT RATED METER CAN ON UNISTRUT SUPPORT

NOTE

1. GENERIC LOADING: V=115 MPH, EXP C, KZ=0.85, SS=3.73g, SITE CLASS=D, SDS=2.64, (2) 1-1/4" CONDUIT, METER MAX WIND AREA = 540 SQ IN.

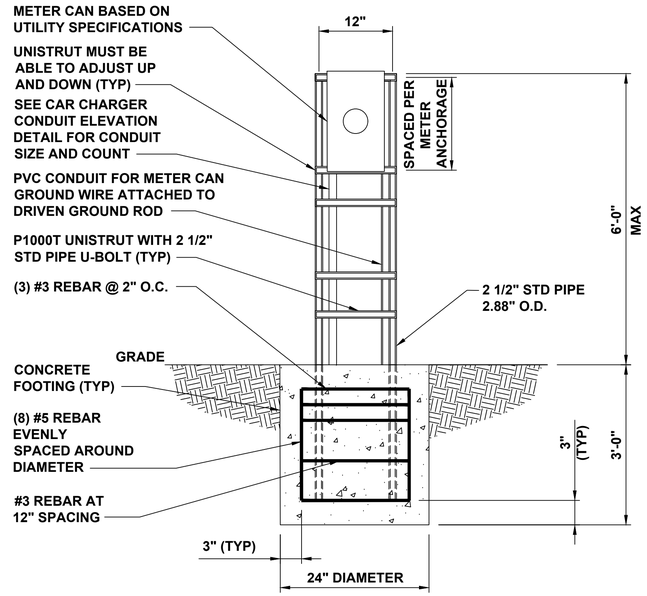

C D-3 **STANDALONE METER CAN UNISTRUT SUPPORT**
SCALE: NTS

NOTES

1. CONTRACTOR TO SELECT CONCRETE FOOTING OR BOLT DOWN BASED ON EXISTING CONDITIONS.
2. SEE SHEET C-3 FOR PLACEMENT.
3. BOTTOM OF LOWEST SIGN TO BE INSTALLED 66" ABOVE GRADE.
4. ADDITIONAL PARKING SIGNS TO BE INSTALLED 2" ABOVE TOP OF PREVIOUS SIGN.
5. SIGN, SIGN POST, AND SIGN FASTENERS TO BE PROVIDED BY CONTRACTOR. CONTRACTOR TO PROVIDE SIGN POST FASTENERS IF REQUIRED AND PAINTED TO MATCH.
6. IF PAINT FINISH IS DAMAGED DURING INSTALLATION, CONTRACTOR SHALL REPAINT AS REQUIRED.

BOLT DOWN BASE PLATE NOTES

1. CONTRACTOR TO PROVIDE AND INSTALL SIGN POST, BASE PLATE ASSEMBLY, EXPANSION ANCHORS, AND 1/2" DIA A307 BOLT.
2. BASE PLATE ASSEMBLY TO BE HOT DIPPED GALVANIZED. PAINT TO MATCH SIGN POST.
3. PROVIDE 1/4" DIA. DRAIN HOLE TO PREVENT WATER FROM COLLECTING IN HSS.

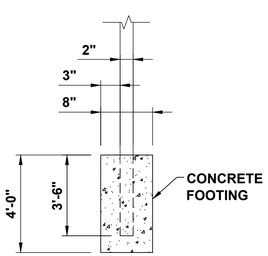

BEHIND CURB

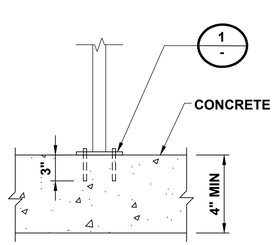

NEW OR EXISTING SIDEWALK

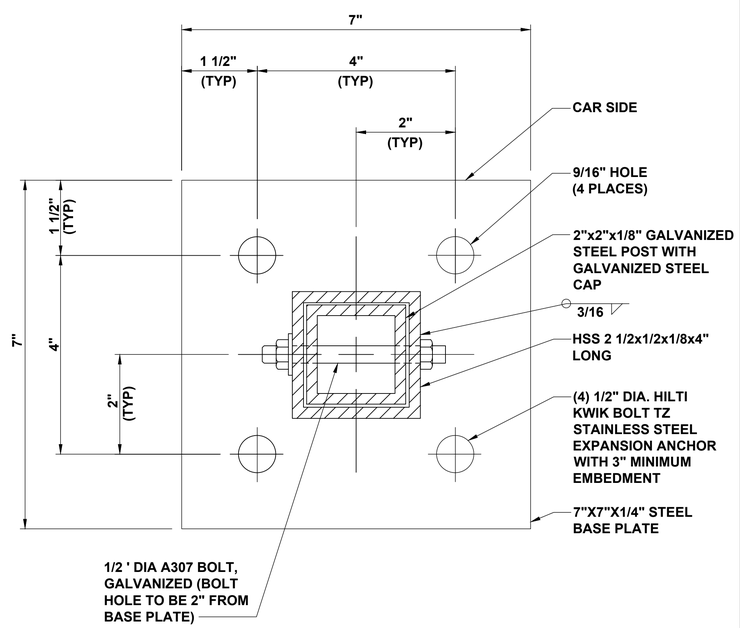

BASE PLATE DETAIL
-DETAIL 1

D D-3 **SIGN POST INSTALLATION DETAIL**
SCALE: NTS

E D-3 **NOT USED**
SCALE: N.T.S.

electrify america

ELECTRIFY AMERICA, LLC.
2003 EDMUND HALLEY DRIVE
SUITE 200
RESTON, VA 20191

Kimley»Horn

4582 S. ULSTER STREET
SUITE 1500
DENVER, CO 80237
303-288-2300

Job Name:

THE OUTLETS COLLECTION

1101 OUTLET COLLECTION WAY
AUBURN, WA 98001

SHEET DESCRIPTION:
DETAILS

KYLE WATSON
STATE OF WASHINGTON
REGISTERED PROFESSIONAL ENGINEER

Project #: 210216
File: CONSTRUCTION DOCUMENTS
Drawn by: JWM
Date(s): 10/05/2019
11/26/2019 REV #1 CD90 PLANS
5/19/2020 REV #2 CD100 PLANS

D-3

K:\DEN_CIVIL\096867000_ELECTRIFY AMERICA\WA210216 - OUTLETS COLLECTION (AUBURN, WA)\CADD\PLANSHEETS\DETAIL SHEETS.DWG

NOTES

1. BOTTOM OF STENCIL TO BE PLACED AT THE LEADING EDGE OF THE PROPOSED PARKING STALL
2. STENCIL TO FIT WITHIN DIMENSIONS SHOWN
3. PAVEMENT MARKING TO BE PAINTED WHITE

PAINT SPECIFICATIONS

1. PAINT SHALL BE WATERBORNE OR SOLVENT BORNE, COLORS AS SHOWN OR SPECIFIED HEREIN. PAVEMENT MARKING PAINTS SHALL COMPLY WITH APPLICABLE STATE AND LOCAL LAWS ENACTED TO ENSURE COMPLIANCE WITH FEDERAL CLEAN AIR STANDARDS. PAINT MATERIALS SHALL CONFORM TO THE RESTRICTIONS OF THE LOCAL AIR POLLUTION CONTROL DISTRICT.
2. WATERBORNE PAINT: PAINTS SHALL CONFORM TO FS TT-P-1952.
3. SOLVENT BORNE PAINT: PAINT SHALL CONFORM TO FS A-A-2886 OR AASHTO M248. PAINT SHALL BE NON_BLEEDING, QUICK_DRYING, AND ALKYD PETROLEUM BASE PAINT SUITABLE FOR TRAFFIC_BEARING SURFACE AND BE MIXED IN ACCORDANCE WITH MANUFACTURER'S INSTRUCTIONS BEFORE APPLICATION.

A / D-4 **EV PAVEMENT MARKING DETAIL**

SCALE: N.T.S.

NOTE

1. HANDHOLE TO BE OLDCASTLE POLYMER PRODUCT NUMBER 2436 WITH A DEPTH OF 18".
2. CONTRACTOR TO SUBMIT ALTERNATIVE HANDHOLE DETAIL TO ELECTRIFY AMERICA FOR APPROVAL PRIOR TO PROCUREMENT AND INSTALLATION.

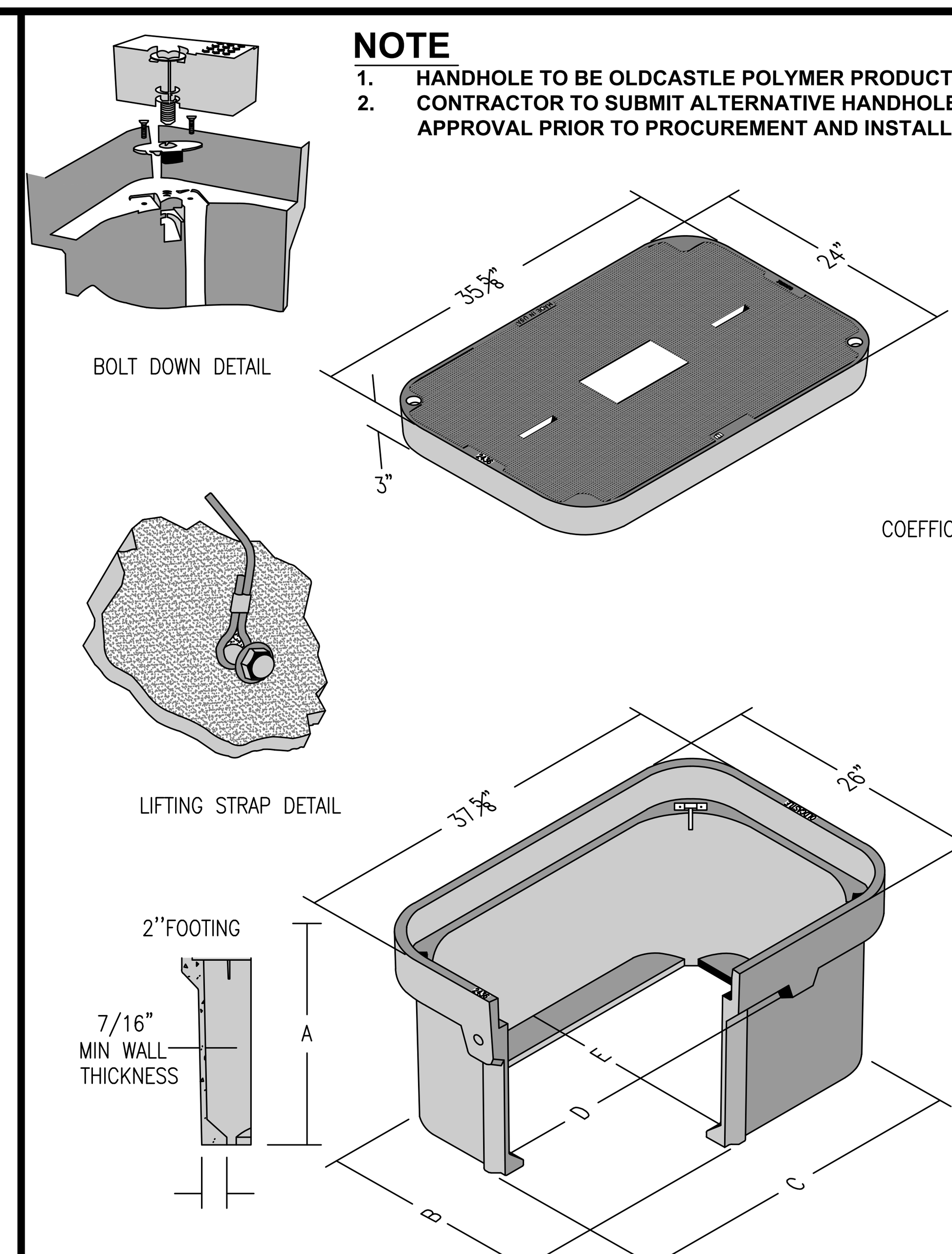

COVER:

STYLE:	FLUSH SOILD
MATERIAL:	POLYMER CONCRETE
MODEL:	24"X36"
WEIGHT:	TIER 15: 150 LBS TIER 22: 204 LBS
STD.FASTENERS:	1/2-13 STAINLESS STEEL HEX HEAD BOLT, WASHER AND FLOATING NUT
OPTIONS:	LOGOS AND SPECIAL MARKINGS
SURFACE:	SLIP RESISTANT & MARKED*
COEFFICIENT OF FRICTION:	>0.6ASTM 1028
PERFORMANCE:	ANSI/SCTE-77 TIER 15, WUC 3.6 ASTM C857A-12 ANSI/SCTE-77 TIER22, WUC3.6, ASTM C857A-16

BODY:

MATERIAL:	POLYMER CONCRETE
MODEL:	24"X36"
WEIGHT:	18" DEPTH: 142LBS
WALL TYPE:	STRAIGHT
PERFORMANCE:	ANSI/SCTE-77 TIER22, WUC3.6, ASTM C857A-16

MEDIUM DUTY: ANSI/SCTE TIER 15

HEAVY DUTY: ANSI/SCTE TIER 22

FOR USE IN NON-VEHICULAR TRAFFIC

	A	B	C	D	E
2436-18	18	23-5/8	35-1/4	33-3/15	21-9/16

B / D-4 **HANDHOLE DETAIL (OR APPROVED EQUAL)**

SCALE: N.T.S.

NOTE

1. REFER TO REINFORCED CONCRETE NOTE FOR CONCRETE REQUIREMENTS

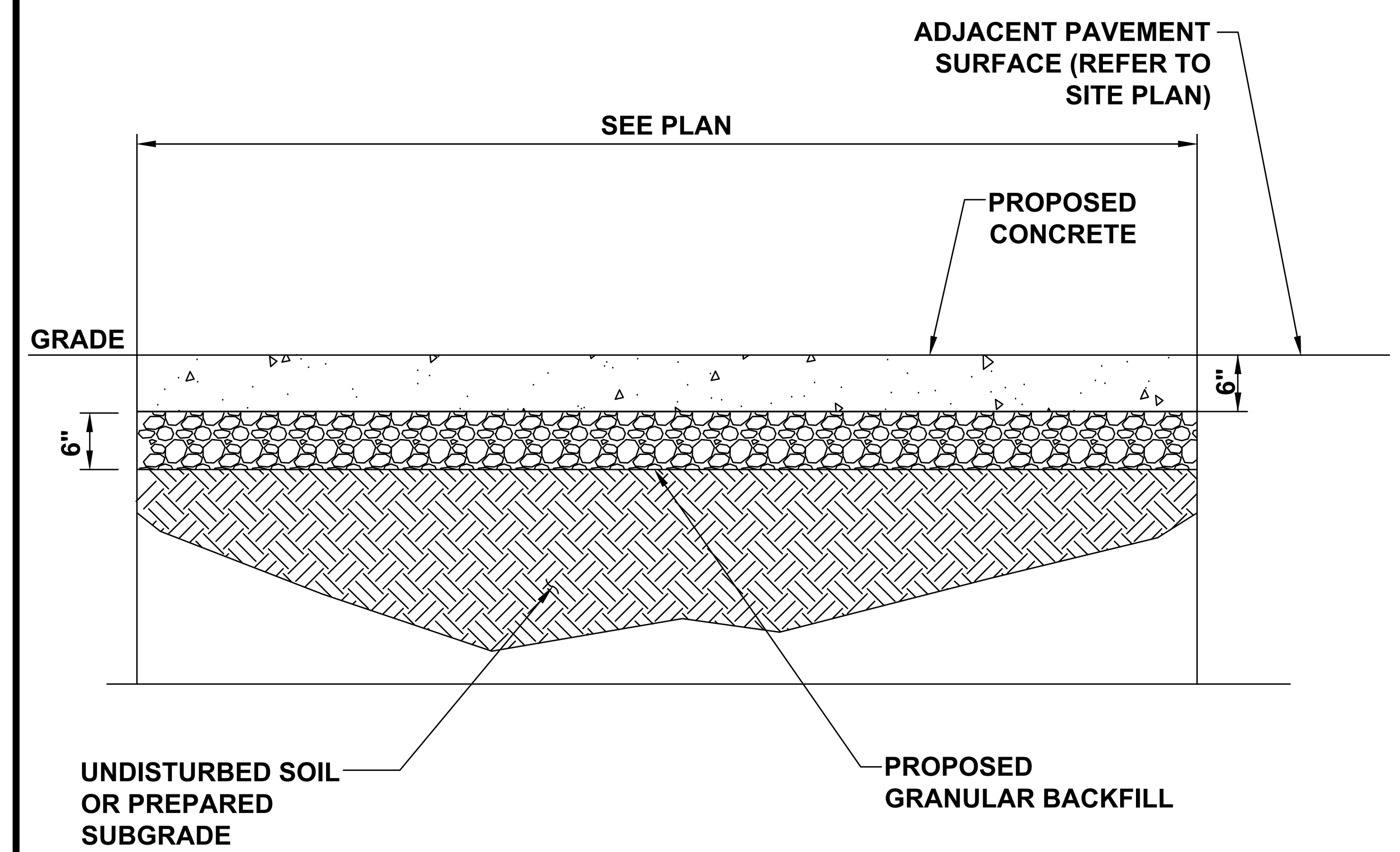

C / D-4 **PARKING LOT CONCRETE DETAIL**

SCALE: N.T.S.

NOTES

1. Size the Below Inlet Grate Device (BIGD) for the storm water structure it will service.
2. The BIGD shall have a built-in high-flow relief system (overflow bypass).
3. The retrieval system must allow removal of the BIGD without spilling the collected material.
4. Perform maintenance in accordance with Standard Specification 8-01.3(15).

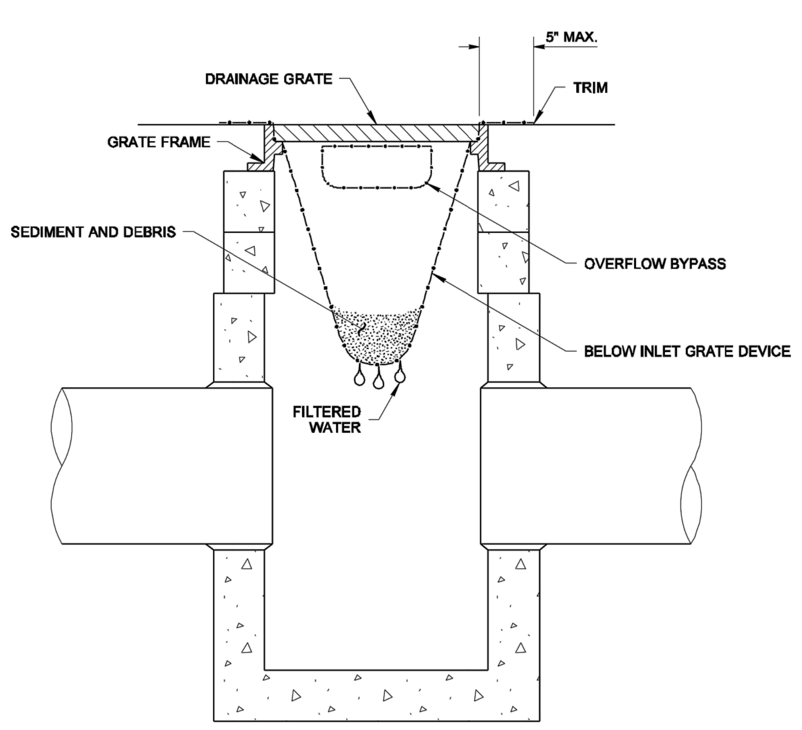

SECTION VIEW

NOT TO SCALE

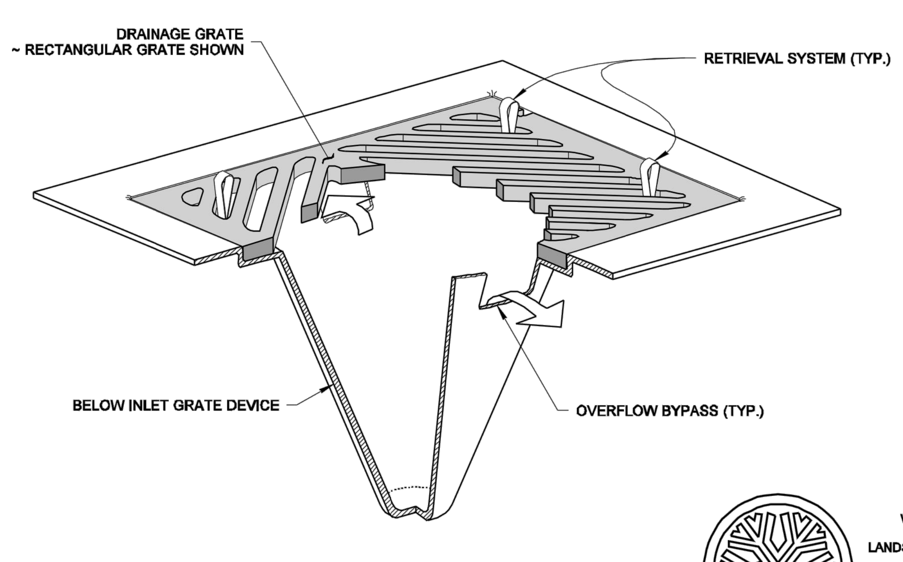

ISOMETRIC VIEW

STATE OF WASHINGTON REGISTERED LANDSCAPE ARCHITECT

MARK W. MAURER

CERTIFICATE NO. 000598

NOTE: THIS PLAN IS NOT A LEGAL ENGINEERING DOCUMENT BUT AN ELECTRONIC DUPLICATE. THE ORIGINAL, SIGNED BY THE ENGINEER AND APPROVED FOR PUBLICATION, IS KEPT ON FILE AT THE WASHINGTON STATE DEPARTMENT OF TRANSPORTATION. A COPY MAY BE OBTAINED UPON REQUEST.

STORM DRAIN INLET PROTECTION

STANDARD PLAN I-40.20-00

SHEET 1 OF 1 SHEET

APPROVED FOR PUBLICATION

Pasco Bakotich III — STATE DESIGN ENGINEER — *09-20-07* DATE

Washington State Department of Transportation

D / D-4 **NOT USED**

SCALE: N.T.S.

electrify america

ELECTRIFY AMERICA, LLC.
2003 EDMUND HALLEY DRIVE
SUITE 200
RESTON, VA 20191

Kimley»Horn

4582 S. ULSTER STREET
SUITE 1500
DENVER, CO 80237
303-288-2300

Job Name:

THE OUTLETS COLLECTION

1101 OUTLET COLLECTION WAY
AUBURN, WA 98001

SHEET DESCRIPTION:
DETAILS

KYLE WATSON — STATE OF WASHINGTON — REGISTERED PROFESSIONAL ENGINEER

Project #:	210216
File:	CONSTRUCTION DOCUMENTS
Drawn by:	JWM
Date(s):	10/05/2019
11/26/2019	REV #1 CD90 PLANS
5/19/2020	REV #2 CD100 PLANS

D-4

K:\DEN_CIVIL\096867000_ELECTRIFY_AMERICA\WA210216 – OUTLETS COLLECTION (AUBURN, WA)\CADD\PLANSHEETS\DETAIL SHEETS.DWG

You created this PDF from an application that is not licensed to print to novaPDF printer (http://www.novapdf.com)

© 2019 Westwood Professional Services, Inc.

LEGAL DESCRIPTIONS

THOSE PORTIONS OF TRACT A AND LOT 1, CITY OF AUBURN SHORT PLAT NO, SPL 0005-98 RECORDED UNDER KING COUNTY RECORDING NO. 9812221898 AND OF LOT A, OF AUBURN LOT LINE ADJUSTMENT NO. LLA 0019-94 RECORDED UNDER KING COUNTY RECORDING NO. 9501100684 DESCRIBED AS A WHOLE AS FOLLOWS:

BEGINNING AT THE INTERSECTION OF THE CENTERLINE OF INDUSTRY DRIVE SOUTHWEST AND THE SOUTH LINE OF THAT PORTION THEREOF VACATED BY ORDINANCE NO. 4668 OF THE CITY OF AUBURN,
THENCE NORTH 00°14'30" WEST 260.29 FEET AI]ONG THE WEST LINE OF SAID TRACT A TO AN ANGLE POINT THEREIN AND THE NORTH LINE OF AUBURN 400 CORPORATE PARK DIVISION I, ACCORDING TO THE PLAT THEREOF RECORDED IN VOLUME 128 OF PLATS, PAGES 97 THROUGH 99, INCLUSIVE, RECORDS OF KING COUNTY, WASHINGTON;
THENCE SOUTH 89°19'52" WEST 30.61 FEET ALONG SAID NORTH LINE:
THENCE LEAVING SAID NORTH LINE NORTH 00°13'46" WEST 34.70 FEET;
THENCE NORTH 06°12'44" EAST 50.32 FEET TO THE BEGINNING OF NON TANGENT CURVE CONCAVE SOUTHWESTERLY HAVING A RADIUS OF 320.00 FEET (A RADIAL LINE TO SAID BEGINNING BEARS NORTH 89°42'01" EAST);
THENCE NORTHERLY AND NORTHWESTERLY 271.96 FEET ALONG SAID CURVE THROUGH A CENTRAL ANGLE OF 48°41'41";
THENCE NORTH 48°59'40" WEST 140.67 FEET TO THE BEGINNING OF CURVE CONCAVE EASTERLY HAVING A RADIUS OF 365.00 FEET;
THENCE NORTHWESTERLY 208.83 FEET ALONG SAID CURVE THROUGH A CENTRAL ANGLE OF 32°46'50" TO THE WESTERLY LINE OF SAID LOT 1;
THENCE NORTH 10°21'40" EAST 1453.89 FEET ALONG THE WESTERLY LINE OF SAID LOT 1 AND THE EASTERLY LINE OF SAID LOT A TO THE SOUTHERLY MARGIN OF S.R. 18 (P.S.H. NO. 2);
THENCE ALONG SAID SOUTHERLY MARGIN AND THE SOUTHERLY MARGIN OF S.R. 167 THE FOLLOWING FOUR COURSES:
THENCE SOUTH 83°13'22" WEST 700.56 FEET;
THENCE SOUTH 77°30'44" WEST 301.50 FEET;
THENCE SOUTH 73°17'48" WEST 609.12 FEET;
THENCE SOUTH 57°29'24" WEST 546.54 FEET TO THE WEST LINE OF SAID SECTION 13;
THENCE SOUTH 00°39'06" EAST 14.76 FEET ALONG SAID WEST LINE TO THE SOUTHWEST CORNER OF SAID SECTION 13;
THENCE SOUTH 88°47'59" WEST 24.12 FEET ALONG THE NORTH LINE OF SAID SECTION 23 TO SAID SOUTHERLY MARGIN OF S.R. 167;
THENCE ALONG THE SOUTHERLY AND SOUTHEASTERLY MARGIN OF SAID S.R. 167 THE FOLLOWING FOUR COURSES:
THENCE SOUTH 57°29'24" WEST 482.60 FEET;
THENCE SOUTH 28°05'39" WEST 44139 FEET;
THENCE SOUTH 33°24'43" WEST 466.91 FEET;
THENCE SOUTH 27°56'41" WEST 87.47 FEET TO THE NORTH LINE OF TRACT "A", SAID AUBURN 400 CORPORATE PARK,
THENCE NORTH 88°38'10" EAST 353.56 FEET ALONG LAST SAID NORTH LINE TO THE EAST LINE OF LAST SAID TRACT "A";
THENCE NORTH 01°21'50" WEST 4.21 FEET ALONG THE WEST LINE OF THE PARCEL DESCRIBED IN DEED TO THE CITY OF AUBURN RECORDED UNDER RECORDING NO. 9508020353 TO THE NORTHWEST CORNER THEREOF;
THENCE NORTH 88°38'10" EAST 48.54 FEET ALONG THE NORTH LINE OF SAID PARCEL TO THE NORTHEAST CORNER THNEOF;
THENCE NORTH 04°07'11" EAST 10.05 FEET;
THENCE NORTH 01°21'50" WEST 65.68 FEET TO THF BEGINNING OF A CURVE CONCAVE SOUTHEASTERLY HAVING A RADIUS OF 284.50 FEET;
THENCE NORTHERLY AND NORTHEASTERLY 302.82 FEET ALONG SAID CURVE THROUGH A CENTRAL ANGLE OF 60°59'07";
THENCE NON-TANGENT TO THE PRECEDING CURVE NORTH 67°57'12" EAST 42.52 FEET TO THE BEGINNING OF A NON-TANGENT CURVE CONCAVE SOUTHERLY HAVING A RADIUS OF 281.50 FEET (A RADIAL LINE TO SAID BEGINNING BEARS NORTH 21°47'03" WEST);
THENCE NORTHEASTERLY AND EASTERLY 100.33 FEET ALONG SAID CURVE THROUGH A CENTRAL ANGLE OF 20°25'13";
THENCE NORTH 88°38'10" EAST 194.75 FEET TO THE BEGINNING OF A CURVE CONCAVE SOUTHWESTERLY HAVING A RADIUS OF 39.50 FEET;
THENCE EASTERLY, SOUTHEASTERLY AND SOUTHERLY 62.59 FEET ALONG SAID CURVE THROUGH A CENTRAL ANGLE OF 90°46'54";
THENCE NORTH 89°25'04" EAST 0.50 FOOT;
THENCE SOUTH 00°34'56" EAST 350.47 FEET;
THENCE SOUTH 00°51'00" WEST 108.05 FEET;
THENCE SOUTH 03°27'08" WEST 132.18 FEET;
THENCE SOUTH 00°34'56" EAST 51.21 FEET;
THENCE NORTH 89°25'04" EAST 72.00 FEET;
THENCE SOUTH 00°34'56" EAST 164.48 FEET TO THE SOUTH LINE OF THAT PORTION OF "0" STREET SOUTHWEST VACATED BY ORDINANCE NUMBER 4669 OF THE CITY OF AUBURN;
THENCE NORTH 89°25'04" EAST 4.63 FEET ALONG SAID SOUTH LINE;
THENCE NORTH 03°35'32" WEST 8.13 FEET;
THENCE NORTH 00°34'56" WEST 3.88 FEET TO THE BEGINNING OF A CURVE CONCAVE SOUTHEASTERLY HAVING A RADIUS OF 35.00 FEET;
THENCE NORTHERLY, NORTHEASTERLY AND EASTERLY 54.98 FEET ALONG SAID CURVE THROUGH A CENTRAL ANGLE OF 90°00'00";
THENCE NORTH 89°25'04" EAST 115.00 FEET TO THE BEGINNING OF A CURVE CONCAVE SOUTHERLY HAVING A RADIUS OF 282.00 FEET;
THENCE EASTERLY 87.35 FEET ALONG SAID CURVE THROUGH A CENTRAL ANGLE OF 17°44'49";
THENCE SOUTH 72°50'07" EAST 238.01 FEET TO THE BEGINNING OF A CURVE CONCAVE NORTHERLY HAVING A RADIUS OF 318.00 FEET;
THENCE EASTERLY 98.98 FEET ALONG SAID CURVE THROUGH A CENTRAL ANGLE OF 17°50'01" TO A POINT OF TANGENCY ON THE NORTH LINE OF THE SOUTH 180.00 FEET OF LOT 32, SAID PLAT;
THENCE NORTH 89°19'52" EAST 519.00 FEET ALONG LAST SAID NORTH LINE AND ITS EASTERLY PROLONGATION TO THE BEGINNING OF A CURVE CONCAVE SOUTHWESTERLY HAVING A RADIUS OF 35.00 FEET;
THENCE EASTERLY, SOUTHEASTERLY, AND SOUTHERLY 54.98 FEET ALONG SAID CURVE THROUGH A CENTRAL ANGLE OF 90°00'00";
THENCE SOUTH 00°40'08" EAST 5.00 FEET TO THE NORTH LINE OF RIGHT-OF-WAY DESCRIBED IN DEED TO THE CITY OF AUBURN RECORDED UNDER RECORDING NUMBER 9405061416;
THENCE NORTH 89°19'52" EAST 72.00 FEET ALONG SAID NORTH LINE TO THE BEGINNING OF A NON-TANGENT CURVE CONCAVE SOUTHEASTERLY HAVING A RADIUS OF 40.00 FEET (A RADIAL LINE TO SAID BEGINNING BEARS .SOUTH 89°19'52" WEST);
THENCE NORTHERLY, NORTHEASTERLY, AND EASTERLY 62.83 FEET ALONG SAID CURVE THROUGH A CENTRAL ANGLE OF 90°00'00" TO A POINT OF TANGENCY ON THE NORTH LINE OF THE SOUTH 180.00 FEET OF LOT 34, SAID PLAT;
THENCE NORTH 89°19'52" EAST 773.10 FEET ALONG LAST SAID NORTH LINE AND ITS EASTERLY PROLONGATION TO THE BEGINNING OF A CURVE CONCAVE SOUTHWESTERLY HAVING A RADIUS OF 40.00 FEET;
THENCE EASTERLY, SOUTHEASTERLY AND SOUTHERLY 62.80 FEET ALONG SAID CURVE THROUH A CENTRAL ANGLE OF 89°57'28" TO THE SOUTH LINE OF SAID VACATED PORTION OF INDUSTRY DRIVE SOUTHWEST;
THENCE NORTH 89°45'30" EAST 36.60 FEET ALONG SAID SOUTH LINE TO THE POINT OF BEGINNING

(ALSO KNOWN AS LOT A, CITY OF AUBURN LOT LINE ADJUSTMENT NO. LLA 05-0014, RECORDED UNDER KING COUNTY RECORDING NO. 20091006900002)

EXCEPT THAT PORTION THEREOF DESCRIBED AS FOLLOWS:

COMMENCING AT THE MOST EASTERLY SOUTHEAST CORNER OF SAID LOT A, BEING THE, INTERSECTION OF THE CENTERLINE OF INDUSTRY DRIVE SOUTHWEST AND THE SOUTH LINE OF THAT PORTION THEREOF VACATED BY ORDINANCE NO 4668 OF THE CITY OF AUBURN,
THENCE NORTHERLY THE FOLLOWING EIGHT COURSES ALONG THE EASTERLY LINE OF SAID LOT A:
THENCE NORTH 00°14'30" WEST 260.29.FEET;
THENCE SOUTH 89°19'52" WEST 30.61 FEET;
THENCE NORTH 00°13'46" WEST 34.70 FEET;
THENCE NORTH 06°12'44" EAST 56.32 FEET TO THE BEGINNING OF A NON-TANGENT CURVE CONCAVE SOUTHWESTERLY HAVING A RADIUS OF 320.00 FEET (A RADIAL LINE TO SAID BEGINNING BEARS NORTH 89°42'01" EAST);
THENCE NORTHERLY AND NORTHWESTERLY 271.9E. FEET ALONG SAID CURVE THROUGH A CENTRAL ANGLE OF 48°41'41";
THENCE NORTH 48°59'40" WEST 140.67 FEET TO THE BEGINNING OF A CURVE CONCAVE EASTERLY HAVING A RADIUS OF 365.00 FEET;
THENCE NORTHWESTERLY 208.83 FEET ALONG SAID CURVE THROUGH A CENTRAL ANGLE OF 32°46'50";
THENCE NORTH 10°21'40" EAST 530.43 FEET TO THE MOST NORTHERLY CORNER OF TRACT A, SAID LLA 05-0014, AND THE BEGINNING OF A NON-TANGENT CURVE CONCAVE WESTERLY HAVING A RADIUS OF 382.00 FEET (A RADIAL LINE TO SAID BEGINNING BEARS NORTH 88°57'41" EAST), AND TO THE TRUE POINT OF BEGINNING;
THENCE LEAVING SAID EASTERLY LINE, NORTHERLY 58.51 FEET ALONG SAID CURVE THROUGH A CENTRAL ANGLE OF 08°46'36" TO THE WESTERLY PROLONGATION OF THE SOUTH LINE OF LOT 4, LLA 05-0014,
THENCE CONTINUING NORTHERLY AND NORTHWESTERLY 108.13 FEET ALONG THE PROLONGATION OF LAST SAID CURVE THROUGH A CENTRAL ANGLE OF 16°13'04" TO A RADIAL LINE OF SAID CURVE WHICH BEARS NORTH 63°13'04" EAST;
THENCE SOUTH 63°58'01" WEST 8.50 FEET TO THE BEGINNING OF A NON TANGENT CURVE CONCAVE SOUTHWESTERLY HAVING A RADIUS OF 373.50 FEET. (A RADIAL LINE TO SAID BEGINNING BEARS NORTH 63°58'01" EAST)
THENCE NORTHWESTERLY AND WESTERLY 270.35 FEET ALONG SAID CURVE THROUGH A CENTRAL ANGLE OF 41°28'22";
THENCE NORTH 67°30'21" WEST 752.25 FEET
THENCE NORTH 00°29'34" WEST 101.28 FEET TO THE NORTHERLY LINE OF SAID LOT A;
THENCE EASTERLY ALONG SAID NORTHERLY LINE THE FOLLOWING THREE COURSES:
THENCE NORTH 73°17'48" EAST 115.88 FEET;
THENCE NORTH 77°30'44" EAST 301.50 FEET;
THENCE NORTH 83°13'22" EAST 700.56 FEET TO SAID EASTERLY LINE OF LOT A;
THENCE 10°21'40" WEST 864.23 FEET ALONG SAID EASTERLY LINE TO THE SOUTHWEST CORNER OF LOT 4;
THENCE CONTINUING SOUTH 10°21'40" WEST 59.23 FEET ALONG SAID EASTERLY LINE TO THE TRUE POINT OF BEGINNING.

VICINITY MAP

(NOT TO SCALE)

BASIS OF BEARINGS

HELD N 89°05'48" W BETWEEN MONUMENTS FOUND ON THE CENTERLINE OF 15TH ST SW PER GPS OBSERVATIONS. NAD83/2011 WASHINGTON STATE PLANE COORDINATE SYSTEM, NORTH ZONE.

SURVEY REFERENCES

R1. RECORD OF SURVEY, RECORDED IN BOOK 266, OF SURVEYS, PAGE 121, RECORDS OF KING COUNTY, WASHINGTON.

VERTICAL DATUM

NAVD88 PER GPS OBSERVATIONS.

SURVEYOR'S NOTES

1. THE TOPOGRAPHIC SURVEY SHOWN HEREON WAS PERFORMED IN JUNE OF 2019. THE FIELD DATA WAS COLLECTED AND RECORDED ON MAGNETIC MEDIA THROUGH AN ELECTRONIC THEODOLITE. THE DATA FILE IS ARCHIVED ON DISC OR CD. WRITTEN FIELD NOTES MAY NOT EXIST. CONTOURS ARE SHOWN FOR CONVENIENCE ONLY. DESIGN SHOULD RELY ON SPOT ELEVATIONS.
2. ALL MONUMENTS SHOWN HEREON WERE LOCATED DURING THE COURSE OF THIS SURVEY UNLESS OTHERWISE NOTED.
3. THE UNDERGROUND UTILITIES SHOWN HAVE BEEN LOCATED FIELD SURVEY INFORMATION AND EXISTING DRAWINGS. THE SURVEYOR MAKES NO GUARANTEES THAT THE UNDERGROUND UTILITIES SHOWN COMPRISE ALL SUCH UTILITIES IN THE AREA, EITHER IN SERVICE OR ABANDONED. THE SURVEYOR FURTHER DOES NOT WARRANT THAT THE UNDERGROUND UTILITIES SHOWN ARE IN THE EXACT LOCATION INDICATED ALTHOUGH HE DOES CERTIFY THAT THEY ARE LOCATED AS ACCURATELY AS POSSIBLE FROM INFORMATION AVAILABLE. THE SURVEYOR HAS NOT PHYSICALLY LOCATED THE UNDERGROUND UTILITIES.
4. SUBJECT PROPERTY TAX PARCEL NO. 242104-9076
5. SUBJECT PROPERTY AREA PER THIS SURVEY IS 3,938,480 ±S.F. (90.42 ACRES)
6. THIS SURVEY WAS PERFORMED WITHOUT THE BENEFIT OF A TITLE REPORT. EASEMENTS AND OTHER ENCUMBRANCES MAY EXIST THAT ARE NOT SHOWN HEREON.
7. FIELD DATA FOR THIS SURVEY WAS OBTAINED BY DIRECT FIELD MEASUREMENTS WITH A CALIBRATED ELECTRONIC 5-SECOND TOTAL STATION AND/OR SURVEY GRADE GPS OBSERVATIONS. ALL ANGULAR AND LINEAR RELATIONSHIPS ARE ACCURATE AND MEET THE STANDARDS SET BY WAC 332-130-090.

SCHEDULE B ITEMS

8. RECIPROCAL UTILITY EASEMENT BY AND BETWEEN THE QUADRANT CORPORATION, AND WASHINGTON SUPERMALL INTERESTS L.P., RECORDED 12/01/1993 AS DOCUMENT NO. 9312012068, OF THE KING COUNTY RECORDS.
(BLANKET IN NATURE)

9. DETENTION POND AND DRAINAGE SYSTEM EASEMENT BY AND BETWEEN WASHINGTON SUPERMALL INTERESTS L.P., AND THE QUADRANT CORPORATION, RECORDED 12/01/1993 AS DOCUMENT NO. 9312012069, OF THE KING COUNTY RECORDS.

NOTE: FIRST AMENDMENT TO DETENTION POND AND DRAINAGE SYSTEM EASEMENT BY AND BETWEEN THE QUADRANT CORPORATION, AND WASHINGTON SUPERMALL INTERESTS L.P., RECORDED 01/10/1995, AS DOCUMENT NO. 9501100691, OF THE KING COUNTY RECORDS.
(BLANKET IN NATURE)

10. ORDINANCE NO. 4669, AN ORDINANCE OF THE CITY COUNCIL OF THE CITY OF AUBURN, WASHINGTON, APPROVING THE VACATION OF A PORTION OF "O" STREET S.W. LOCATED NORTH OF 15TH STREET S.W., WITHIN THE CITY OF AUBURN, WASHINGTON, RECORDED 04/08/1994 AS DOCUMENT NO. 9408040868, OF THE KING COUNTY RECORDS.
(PLOTTED AS "O" STREET)

14. DECLARATION OF RECIPROCAL EASEMENTS AND CONSTRUCTION AND OPERATION RESTRICTIONS, RECORDED 01/10/1995 AS DOCUMENT NO. 9501100696, OF THE KING COUNTY RECORDS.
NOTE: ASSIGNMENT AND ASSUMPTION OF DECLARATION OF RECIPROCAL EASEMENTS AND CONSTRUCTION AND OPERATION RESTRICTIONS FROM WASHINGTON SUPERMALL INTERESTS, L.P., ASSIGNOR, TO GLIMCHER SUPERMALL VENTURE, LLC, ASSIGNEE, RECORDED 02/03/1998, AS DOCUMENT NO: 9802031521, OF THE KING COUNTY RECORDS.
NOTE: AMENDED AND RESTATED DECLARATION OF PROTECTIVE COVENANTS, CONDITIONS, RESTRICTIONS, EASEMENTS, AND AGREEMENTS FOR THE SUPERMALL OF THE GREAT NORTHWEST AND ADJACENT OUT PARCELS, RECORDED 09/24/1999, AS DOCUMENT NO. 19990924002023, OF THE KING COUNTY RECORDS.
(BLANKET IN NATURE)

25. EASEMENT IN FAVOR OF THE CITY OF AUBURN, RECORDED 08/30/1995 AS DOCUMENT NO. 9508302010, OF THE KING COUNTY RECORDS.
(BLANKET IN NATURE)

27. EASEMENT IN FAVOR OF THE CITY OF AUBURN, RECORDED 08/30/1995 AS DOCUMENT NO. 9508302012, OF THE KING COUNTY RECORDS.
(BLANKET IN NATURE)

36. LOT LINE ADJUSTMENT NO. LLA 05-0016, RECORDED 10/06/2009 AS DOCUMENT NO. 20091006900003, OF THE KING COUNTY RECORDS.
(SHOWN AS BOUNDARY)

Call 48 Hours before digging:
811 or call811.com
Common Ground Alliance

LEGEND:

⊕	BRASS DISC (FOUND)
	ASPHALT SURFACE
—℄—	CENTERLINE ROW
	CONCRETE SURFACE
—G—	GAS LINE
	INLET (TYPE 1)
LUM	LUMINAIRE
—UP—	POWER (UNDERGROUND)
PT	POWER TRANSFORMER
PV	POWER VAULT
	STORM MANHOLE
SIZE TYPE	TREE (AS NOTED)
—W—	WATER LINE
WV	WATER VALVE

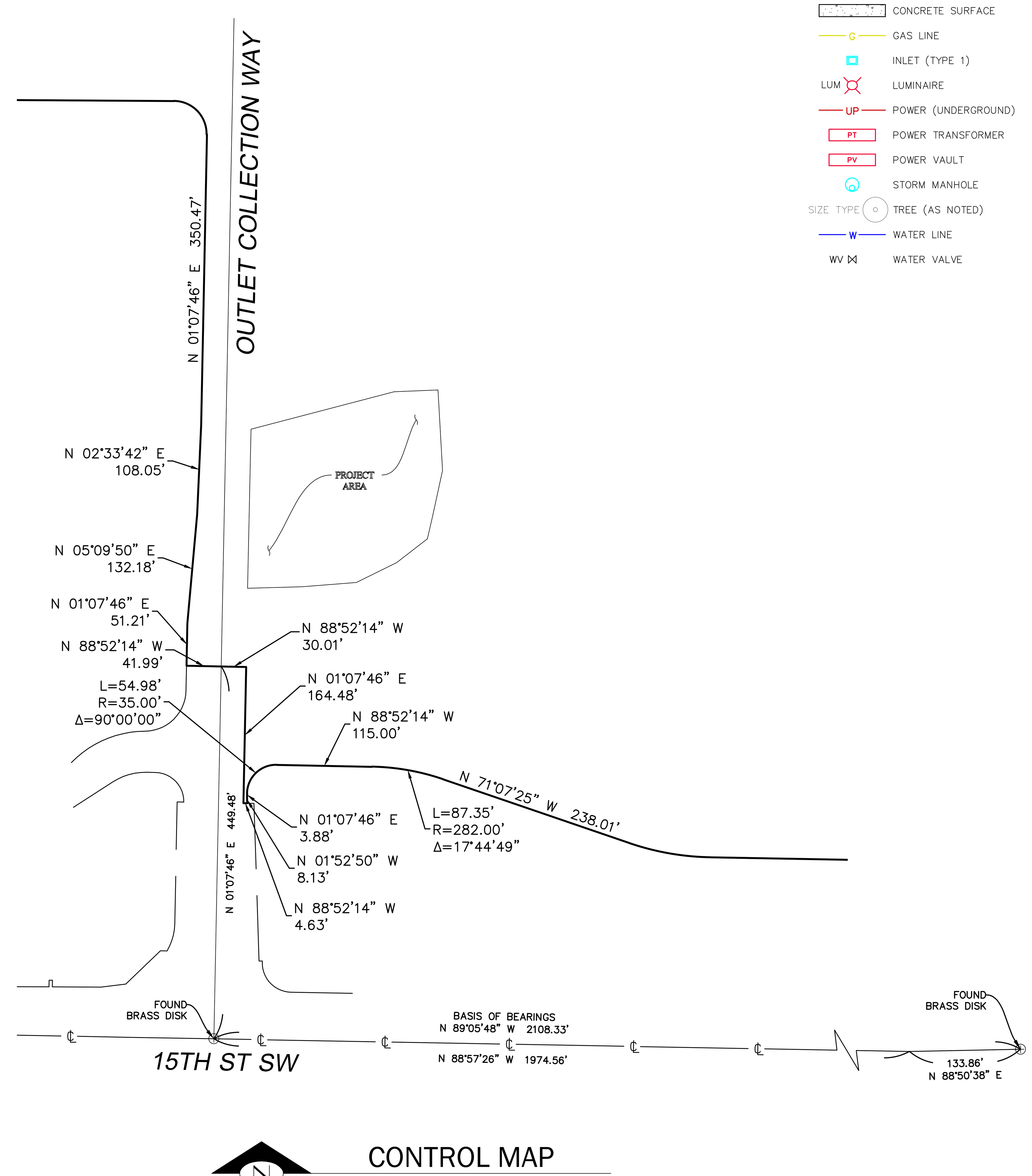

CONTROL MAP
N.T.S.

SURVEYOR'S STATEMENT

This map correctly represents a survey made by me or under my direction in conformance with the requirements of the Professional Land Surveyors' Act at the request of Electrify America, LLC in June, 2019. The field work was completed on 6/26/2019.

DocuSigned by:
303D22D6841743F...

JEFF SAVAGE, LS DATE 7/19/19
WA LICENSE NO. 52088, EXPIRATION 10/04/2019

JEFFREY PASON SAVAGE
STATE OF WASHINGTON
52088
REGISTERED
PROFESSIONAL LAND SURVEYOR
7/19/2019

THE OUTLETS COLLECTION #200213

Z:\2019\191187\DRAWING\191187-T.DWG

DESIGNED:	.
CHECKED:	JPS
DRAWN:	IDV-PSC
HORIZONTAL SCALE:	NTS

INITIAL ISSUE: 7/11/2019
REVISIONS:
7/19/19: TITLE REVIEW

PREPARED FOR:

Electrify America, LLC
2003 Edmund Halley Drive
Reston, VA 20191

Westwood
Phone (952) 937-5150 12701 Whitewater Drive, Suite #300
Fax (952) 937-5822 Minnetonka, MN 55343
Toll Free (888) 937-5150 westwoodps.com
Westwood Professional Services, Inc.

#200213
THE OUTLETS COLLECTION
AUBURN, WA 98001

Terrane
10801 Main Street, Suite 102, Bellevue, WA 98004
phone 425.458.4488 support@terrane.net
www.terrane.net

Topographic Survey
A PORTION OF TRACT A AND LOT 1,
CITY OF AUBURN SHORT PLAT NO. SPL 0005-98
CITY OF AUBURN, KING COUNTY, WA
PROJECT NUMBER: 0021997.D5

SHEET NUMBER: 1 OF 2
DATE: 7/19/2019

© 2019 Westwood Professional Services, Inc.

Z:\2019\191187\DRAWING\191187-T.DWG

THE OUTLETS COLLECTION #200213

DESIGNED:	.
CHECKED:	JPS
DRAWN:	IDV-PSC
HORIZONTAL SCALE:	10'

INITIAL ISSUE: 7/11/2019
REVISIONS:
7/19/19: TITLE REVIEW

PREPARED FOR:

Electrify America, LLC
2003 Edmund Halley Drive
Reston, VA 20191

Westwood
Phone (952) 937-5150 12701 Whitewater Drive, Suite #300
Fax (952) 937-5822 Minnetonka, MN 55343
Toll Free (888) 937-5150 westwoodps.com
Westwood Professional Services, Inc.

#200213
THE OUTLETS COLLECTION
AUBURN, WA 98001

Terrane
10801 Main Street, Suite 102, Bellevue, WA 98004
phone 425.458.4488 support@terrane.net
www.terrane.net

Topographic Survey

A PORTION OF TRACT A AND LOT 1,
CITY OF AUBURN SHORT PLAT NO. SPL 0005-98
CITY OF AUBURN, KING COUNTY, WA

PROJECT NUMBER: 0021997.D5

SHEET NUMBER: 2 OF 2
DATE: 7/19/2019

NOTES

1. WORK / STAGING AREA TO BE CONFIRMED AT PRE-CONSTRUCTION SITE MEETING AND SURROUNDED BY TEMPORARY FENCE DURING CONSTRUCTION.
2. POSSIBLE LOCATION FOR TEMPORARY DRIVE AISLE CLOSURE DURING CONSTRUCTION.
3. CONTRACTOR TO PROVIDE TEMPORARY SIGNS TO DIRECT TRAFFIC FLOW.
4. SHORT TERM FENCING TO BE PROVIDED OUTSIDE OF TEMPORARY FENCE FOR ANY OPEN TRENCHES LEFT OVER NIGHT OR UNATTENDED
5. THE CONTRACTOR SHALL RETURN SIDEWALKS, LANDSCAPING, PLANTERS, IRRIGATION SYSTEMS, AND ANY OTHER FACILITIES DISTURBED BY THE WORK TO THE SAME OR BETTER CONDITION THAN EXISTED PRIOR TO THE COMMENCEMENT OF THE WORK.

LEGEND

- WORKING/STAGING AREA
- DRIVE AISLE CLOSURE
- TEMPORARY DRIVE AISLE
- UTILITY LINE TO BE BORED (OUTSIDE OF WORKING/STAGING AREA)
- UTILITY LINE TO BE TRENCHED (OUTSIDE OF WORKING/STAGING AREA)

TEMPORARY FENCE DETAIL
NO SCALE

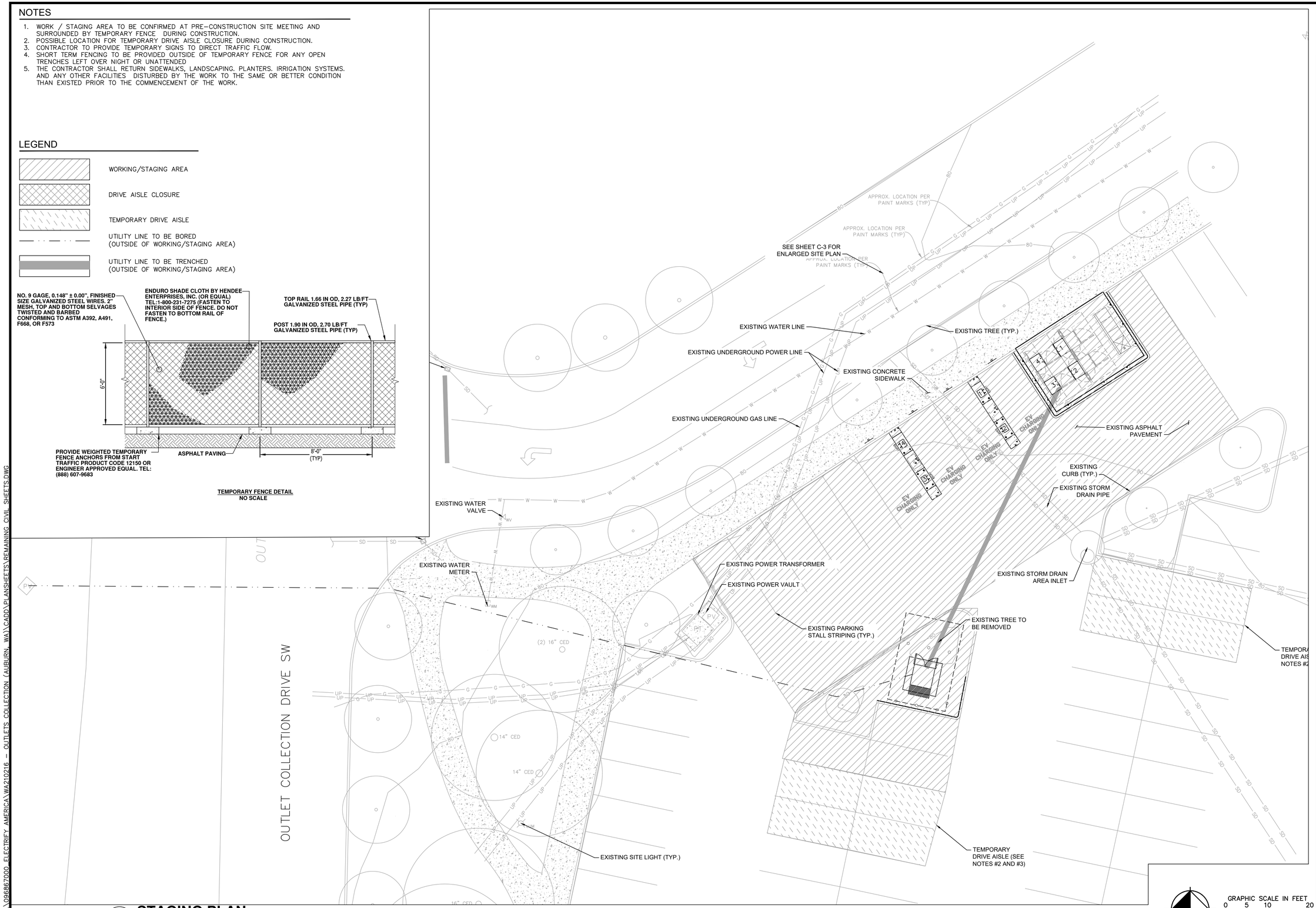

A SP **STAGING PLAN**

K:\DEN_CIVIL\096867000_ELECTRIFY AMERICA\WA210216 - OUTLETS COLLECTION (AUBURN, WA)\CADD\PLANSHEETS\REMAINING CIVIL SHEETS.DWG

electrify america

ELECTRIFY AMERICA, LLC.
2003 EDMUND HALLEY DRIVE
SUITE 200
RESTON, VA 20191

Kimley»Horn

4582 S. ULSTER STREET
SUITE 1500
DENVER, CO 80237
303-288-2300

Job Name:

THE OUTLETS COLLECTION

1101 OUTLET COLLECTION WAY
AUBURN, WA 98001

SHEET DESCRIPTION:
STAGING PLAN

KYLE WATSON
STATE OF WASHINGTON
REGISTERED PROFESSIONAL ENGINEER

Project #: 210216
File: CONSTRUCTION DOCUMENTS
Drawn by: JWM
Date(s): 10/05/2019
11/26/2019 REV #1 CD90 PLANS
5/19/2020 REV #2 CD100 PLANS

SP